GIVEN: $J = 4\ Kg\ m^2$

$\tau = 5\ Nm$ CCW

FIND: ω AFTER $t = 5\ s$

SOLN: $\omega = \alpha t = \left(\frac{\tau}{J}\right) t$

$= \frac{5}{4}(5) = \underline{6.25\ RAD/s}$

$n = \omega \left(\frac{REV}{2\pi\ RAD}\right)\left(\frac{60\ s}{MIN}\right)$

$= \underline{59.7\ RPM}$

TOPS 35500

GIVEN: $\tau = 70\ Nm$

$n = 1500\ RPM$

FIND: P

SOLN: $\tau = \frac{P}{\omega}$ so $P = \tau\omega$

$$P = 70\,(1500)\left(\frac{2\pi}{60}\right) = \underline{\underline{11\ KW}}$$

$$P = 11KW\left(\frac{1\ HP}{746\ W}\right) = \underline{\underline{14.7\ Hp}}$$

TOPS 35500

GIVEN: $\mu_r = 2000$ $\quad i = 1A$

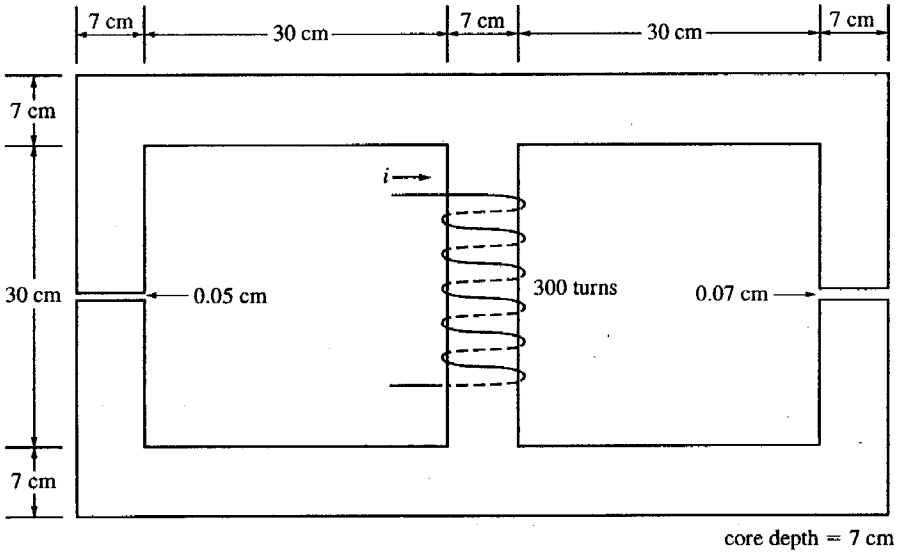

FIND: ϕ IN LEFT, CENTER & RIGHT LEGS

B IN AIR GAPS

SOLN: LET'S DIVIDE CORE INTO... CENTER LEG, LEFT-HALF AND RIGHT-HALF ... THE TOTAL RELUCTANCE IS

$$\mathcal{R}_{CEN} + \mathcal{R}_{LH} \,//\, \mathcal{R}_{RH}$$

NOW $$\mathcal{R}_{CEN} = \frac{0.37}{2000\,(4\pi \times 10^{-7})\,(0.07)^2} = 30\ KAt/Wb$$

$$\mathcal{R}_{LH} = \frac{3\,(0.37) - 0.0005}{2000\,(4\pi \times 10^{-7})\,(0.07)^2} + \frac{0.0005}{4\pi \times 10^{-7}\,(0.07)^2} = 171\ KAt/Wb$$

$$\mathcal{R}_{RH} = \frac{3\,(0.37) - 0.0007}{2000\,(4\pi \times 10^{-7})\,(0.07)^2} + \frac{0.0007}{4\pi \times 10^{-7}\,(0.07)^2} = 203\ KAt/Wb$$

TOPS 35500

THUS,

$$T_{TOT} = 30 + \frac{203(171)}{203+171} = 122.8 \text{ KAt/Wb}$$

AND $$\phi_{TOTAL} = \frac{300(1)}{122.8} = \underline{2.44 \text{ mWb}}$$

NOW ϕ WILL SPLIT INTO LEFT & RIGHT SIDES LIKE CURRENT DIVIDER...

SO, $$\phi_{LH} = \frac{203}{171+203}\,\phi_{TOTAL} = 1.33 \text{ mWb}$$

$$\phi_{RH} = \frac{171}{203+171}\,\phi_{TOTAL} = 1.11 \text{ mWb}$$

AND... $$B_{LH} = \frac{\phi_{LH}}{A} = \frac{1.33\text{m}}{(0.07)^2} = \underline{0.27 \text{ T}}$$

$$B_{RH} = \frac{1.11\text{m}}{(0.07)^2} = \underline{0.23 \text{ T}}$$