GIVEN:

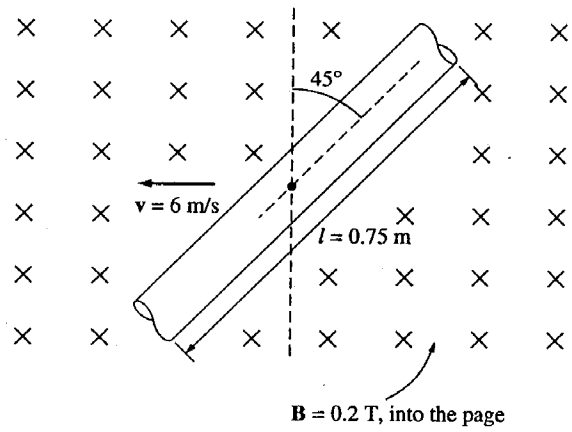

FIND: INDUCED VOLT IN WIRE

SOLN:

$$e = (v \times B) \cdot l$$

$$= (6\ m/s)(0.2)(0.75m)\cos(45°)$$

$$= 0.64\ V \qquad \text{POS. DOWN}$$

TOPS 35500

GIVEN:

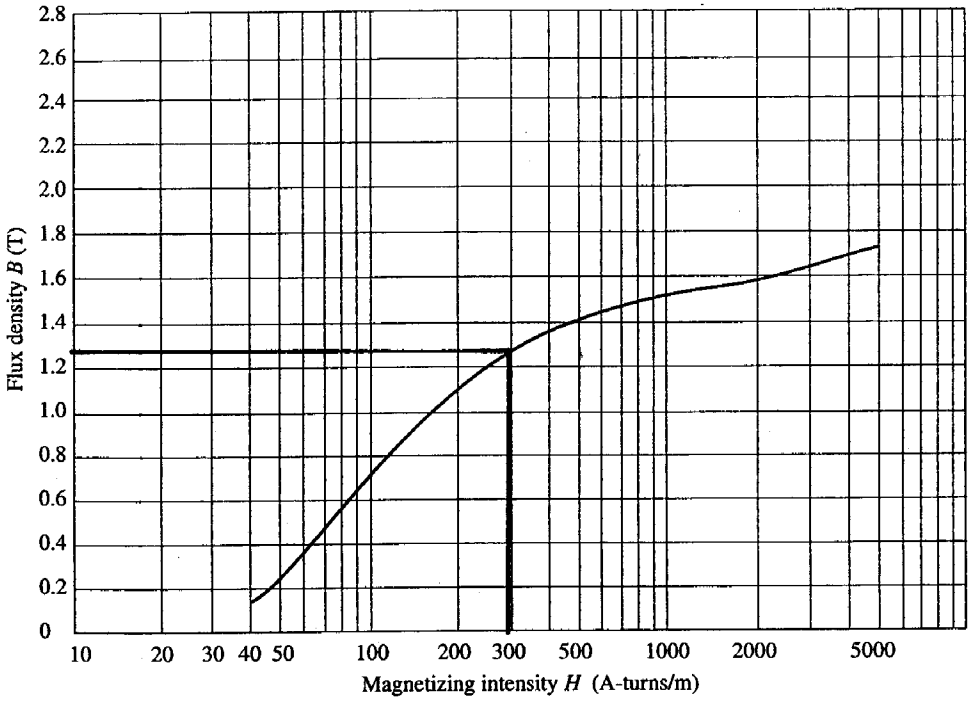

$l_c = 10$ IN. $\quad N = 300 \quad A = 0.25\ IN^2$

$i = 0.25A$

FIND: ϕ & B

SOLN: $H = \dfrac{Ni}{l} = \dfrac{300(0.25)}{10\,(0.0254\ m/IN)}$

$H = 295\ A\cdot t/m$ FROM PLOT $B = \underline{1.27\ T}$

$\phi = BA = 1.27(0.25)\left(0.0254\ \dfrac{m}{IN}\right)^2$

$\phi = \underline{205\ \mu Wb}$

GIVEN:

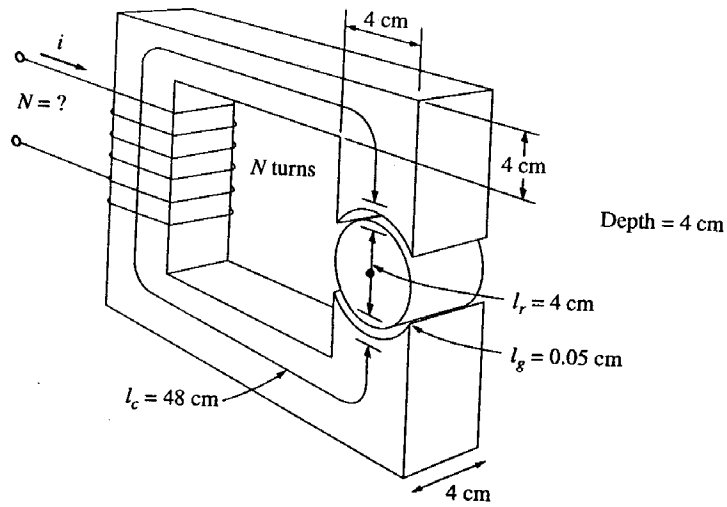

$A_g = 18\ cm^2$ EACH

FIND: A) B^{MAX} B) ϕ^{MAX} C) N FOR $i = 1A$

SOLN:

A) USING FIG. 10C A REASONABLE $B = 1.2T$

B) USING THIS AS MAX

$$\phi = BA = 1.2(.04)^2 = 1.92\ mWb$$

C) FIRST... FIND $R_{TOT} = R_{STATOR} + R_{ROTOR} + R_{AIRGAPS}$

$$R_{TOT} = 62.8 + 5.2 + 2(221) = 510\ kAt/Wb$$

THEN $\mathcal{F} = Ni = \phi R_{TOT}$

$N \cong 1000$ turns