EE 221 Lab Experiment #1 Fall 2012

Background:
Electrical engineers use lots of equipment to set-up and analyze circuits. In this course, we will use many different pieces of equipment and a variety of components. You will be expected to learn how to use these items on your own (in some cases with little guidance). How can you figure out how to use stuff you've never used before?

This first lab experiment will use the following pieces of equipment: a DC power supply, a multimeter, and a breadboard. Before coming to lab, find out how to use this equipment … here is a list of websites that should help (you could probably find others):

www.sciencebuddies.org/science-fair-projects/project_ideas/Elec_Breadboard.shtml
http://en.wikipedia.org/wiki/Breadboard
http://www.wonderhowto.com/how-to/video/how-to-use-a-breadboard-also-known-as-a-protoboard-189729/
http://www.youtube.com/watch?v=1sGcL5Eeaeo
http://www.multimeterwarehouse.com/usingamultimeter.htm
http://www.youtube.com/watch?v=y6OA0aPERO0
http://www.hobbyprojects.com/using_a_multimeter.html

Engineering Problem:
Often, we wish to convert electrical power from one form or value to another. For example, when you charge your cell phone you plug the charger into a 120 V_{AC} outlet and the charger converts the AC voltage to a low voltage DC value (around 3.5 V) to charge the battery. Today's lab will examine two different circuits that convert one level of DC voltage to another.

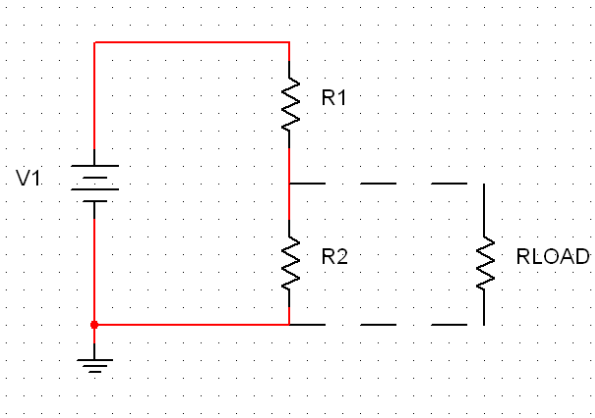

Figure 1: Resistive Divider Network

Circuit #1: The resistive divider network. In Figure 1, a load (resistor) can be connected (in parallel) with resistor R_2. With no load resistor connected, the circuit's current can be analyzed using Ohm's law as:

$$I = \frac{V_1}{R_1 + R_2}$$

Circuit #2: The voltage regulator. In Figure 2, a three-terminal device known as a linear voltage regulator is used to change the input voltage value. When a load (resistor) is connected to the output terminals, the regulator outputs a specified voltage value (we'll use a 5 V regulator in today's lab – so the output voltage will be 5 V).

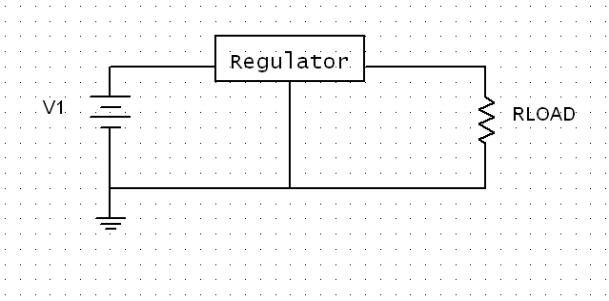

Figure 2: Voltage Regulator Circuit

You can learn more about voltage regulators at http://en.wikipedia.org/wiki/78xx .

Experiment:

Part I

Use a DC power supply as the input voltage source (V_1) and set it to a value of 7.5 V. Using the resistor divider circuit shown in Figure 1, design a DC-DC converter by selecting resistor values for R_1 and R_2 so that the output voltage (voltage across R_2) will be 5 V while having the current in the circuit (with no load attached) set to1 mA. Use the breadboard to build your circuit configuring one multimeter to measure the total current in the circuit (out of V_1) and use a second multimeter to measure the output voltage (across R_2). ***Have your instructor verify your design and wiring before energizing your circuit!*** **LAB NOTEBOOK INSTRUCTOR SIGN OFF**

Using a resistance value of 5 kΩ for the load resistor, complete the table shown below by measuring and recording the circuit current and output voltage for each load condition.

Number of load Resistors connected	Output Voltage (V)	Circuit Current (mA)
0		
1		
2		
3		
4		

PART II

Setting the input voltage (V1) to 7.5 V again, build the voltage regulator circuit in Figure 2. Use the breadboard to build your circuit, configuring one multimeter to measure the **output** current in the circuit (into the load) and use a second multimeter to measure the output voltage (across the load.). ***Again, have your instructor verify your wiring before you take any measurements.*** **LAB NOTEBOOK INSTRUCTOR SIGN OFF.**

Using a resistance value of 5 kΩ for the load resistor, complete the table shown below by measuring and recording the output current and output voltage for each load condition.

Number of load Resistors connected	Output Voltage (V)	Output Current (mA)
1		
2		
3		
4		

Follow-up Work:

1. Develop a plot of output voltage (dependent variable) versus the number of load resistors connected (independent variable).

2. Develop a plot of circuit current (dependent variable) versus the number of load resistors connected (independent variable).

3. Using Ohm's law and your measurements, determine the total output resistance for each data point.

4. Which is a 'better' DC-DC converter? Justify and support your opinion by analyzing the results of your lab work.