# EE221 Lab Experiment #3 Fall 2012

**<u>Engineering Problem #1</u>:** Let's assume that we have a power system with multiple sources and loads as shown in Figure 1. Note in the figure we specify regulated power supplies implying like our bench top supply, the voltage is independent of the current drawn. The engineering problem might be the following: given a minimum acceptable voltage across Load #2, determine the smallest equivalent Load #2 resistance that can be successfully used (and what power is consumed). Other relevant questions might be what voltage will exist at Load #2 if we replace it by an open circuit (highest voltage) or what short-circuit current will flow if we replace Load #2 by a short circuit (highest current)?

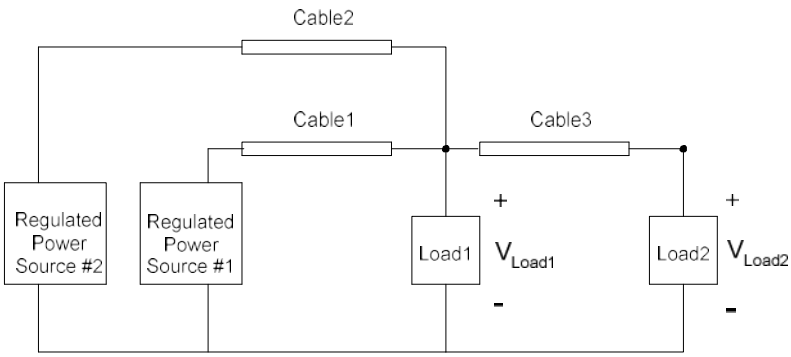


Figure 1: Power System with Regulated Supplies and Multiple Loads

Our initial step at modeling this system might be to replace the Power Sources by independent voltage sources and the cables and loads by resistances. This yields the circuit shown in Figure 2.

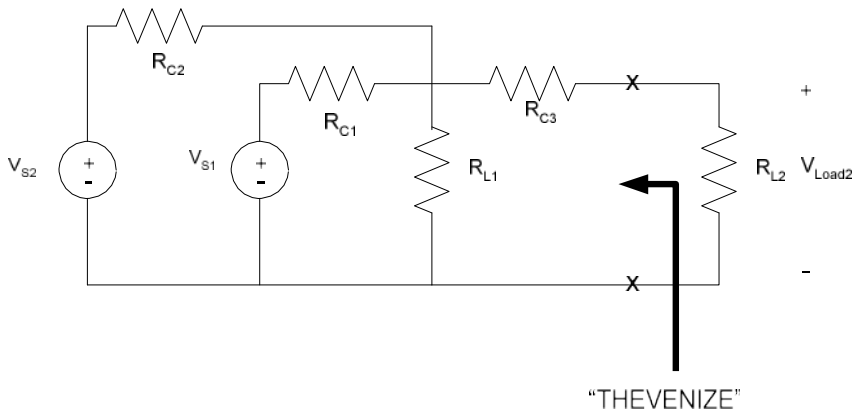


Figure 2: Electrical Circuit Equivalent of the Power System Shown in Figure 1

The questions posed above focus only on how $R_{L2}$ impacts the system. As such the details of the "rest of the system" are not important; therefore, we would like to replace the "rest of the system" by as simple of an equivalent as possible to facilitate our analysis objectives: this simplest circuit

is the Thevenin Equivalent. The goal of the Thevenin process is to reduce part of the network down to an equivalent source and series resistance as shown in Figure 3.

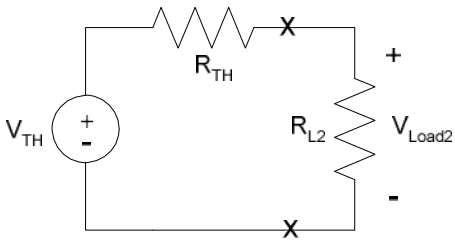


Figure 3: Circuit of Figure 2 with Thevenin Equivalent Inserted

**<u>Problem :</u>** Given that $R_{C1} = 100\Omega$, $R_{C2} = R_{C3} = 47\Omega$, $R_{L1} = 680\Omega$, $V_{S1} = V_{S2} = 6V$

- Measure and record suitable resistors in the lab
- Set the power supply voltages using the DMM voltmeter
- Build the circuit shown in Figure 2 on the breadboard
- Measure the open-circuit voltage ($V_{OC}$) and short-circuit current ($I_{SC}$)
- Calculate the Thevenin resistance using $V_{OC}$ and $I_{SC}$. Compare this against the measured Thevenin resistance (remember, you must 'turn off' the power supplies )
- If $V_{Load\,2,\min} = 3V$, analytically find the minimum permissible $R_{L2}$ using your Thevenin Equivalent Circuit (Fig. 3).
- Insert the predicted $R_{L2}$ into your circuit (Fig. 2) and confirm the voltage across it.

  INSTRUCTOR SIGN OFF