EE221
Lab Experiment #4: Inverting Amplifier Investigation
Fall 2012

Engineering Problem: In many applications, you will need to interface the output of a sensor to a meter, microprocessor, or LED indicator, as shown in Figure 1. Frequently, the sensor signal level is not matched to the output and must be scaled or post-processed. Further, the output resistance of the sensor and the input resistance of the load might introduce a "loading" problem that requires the Signal Conditioning Circuit.

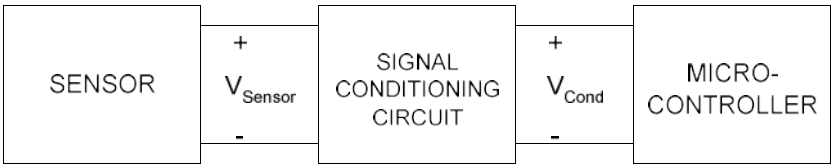

Figure 1: Illustration of Requirement for Signal Conditioning

The operational amplifier (op-amp) offers an ideal solution to the problem. We will investigate the LM741 op amp whose pin out and circuit symbol are shown in Figure 2. Pin 1 is always located directly to the left of the notch in the chip or will be indicated by a dot on the top of the Dual In-line Package (DIP).

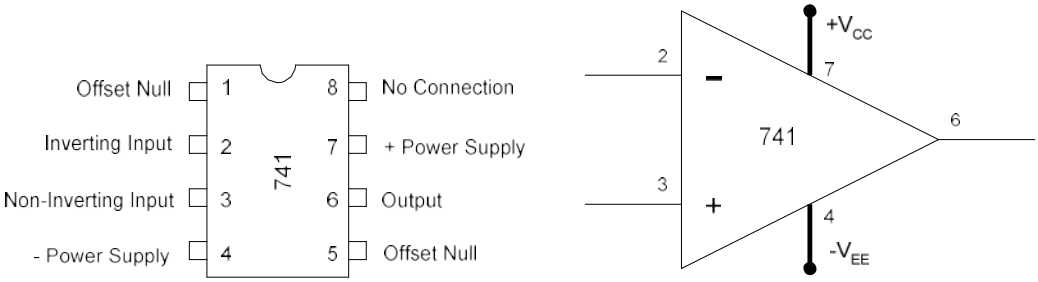

(a) (b)

Figure 2: 741 Op-Amp (a) Integrated Circuit Pin out and (b) Circuit Symbol

Note the 741 op-amp requires separate positive and a negative DC supplies. Typically we will use +15V and -15V. These supplies will bias the internal transistors so the op-amp behaves as advertised.

Problem: For an inverting amplifier with a gain of -5, we wish to investigate the impact of resistor selection on power supply requirements and efficiency and determine the practical value of the onset of voltage saturation. We will do this by varying the design and collecting data at various operating conditions.

1. Energize the proto-board. Set the proto-board power supplies to +15V and -15V using the DMM voltmeter, then de-energize the proto-board

2. Carefully insert the 741 op amp chip into the proto-board and make the power supply connections.
3. We will investigate three competing inverting amplifier designs with gains of -5. Given the topology shown in Figure 3, we will choose $R_1 = 2k\Omega, 20k\Omega,$ and $200k\Omega$. The resistor R_X will ideally carry no current. We will set it equal to $10k\Omega$. Determine corresponding values of R_f to give a gain of -5. The load resistor is fixed at $4.7k\Omega$ for this investigation.

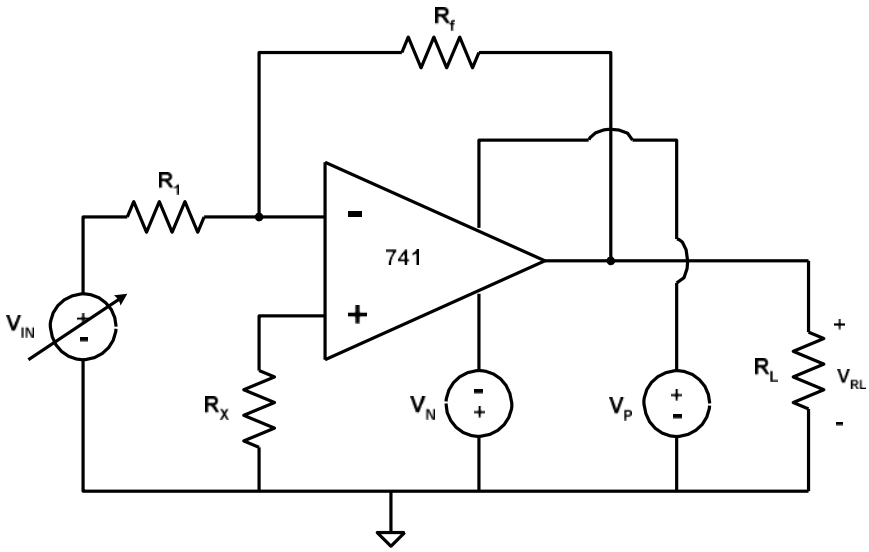

Figure 3: Candidate Inverting Amplifier Configuration

4. If the theoretical maximum output voltage is constrained by the power supply voltages, what is the worst-case power dissipation in the load resistor? Can a $\frac{1}{4}W$ resistor handle this?
5. Collect the resistors, measure them with the DMM, and record the results below in Table 1.0.

Table 1.0 Resistor Measurements

	Resistor	Theoretical	Actual
	R_X	$10k\Omega$	
	R_L	$4.7k\Omega$	
TEST 1	R_1	$2k\Omega$	
	R_f		
TEST 2	R_1	$20k\Omega$	
	R_f		
TEST 3	R_1	$200k\Omega$	
	R_f		

6. Configure resistors R_1, R_f, (use the first set of values) R_X, and R_L on the proto-board to create the circuit of Figure 3.
7. We will implement the variable input voltage with the desk-top power supply. Ensure that it is set to 0V; connect it into your circuit using an alligator clip to couple the positive lead to resistor R_1. If necessary, tape the connection to the board so that the alligator clip does not contact other parts. The negative power supply lead should connect into the ground terminal of the proto-board.
8. Connect one DMM set to DC V across the input voltage.
9. Energize the proto-board. Energize the power supply and set it to 2V. Measure with the second DMM voltmeter V_{R1}, V_{Rf}, V_{RL} and V_{RX} and record the data in Table 2. (Use polarities shown below.)
10. Measure the power supply currents I_P and I_N by placing the ammeter in series between the top horizontal power bus and the vertical power bus runs. Alligator clips should facilitate the connections. Record the data near the bottom of Table 3. (Use current directions shown below)

HAVE THE INSTRUCTOR VERIFY YOUR VALUES—INSTRUCTOR SIGNOFF

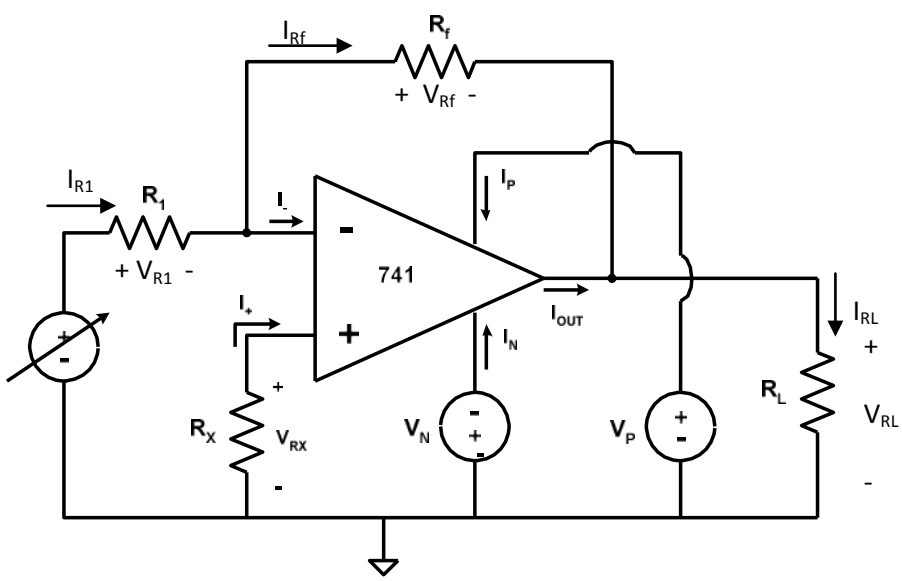

12. Adjust the input voltage to determine precisely when the output voltage saturates. Record this value in Tables 4.
14. Next, change R_1 to $20k\Omega$ and R_f to the second design value and repeat the measurements. Record all of your data in Tables 2, 3 and 4.
15. Finally, change R_1 to $200k\Omega$ and R_f to the third design value and repeat the measurements. Record all of your data in Tables2, 3 and 4.

Table 2: Voltage Measurements

Desired R_1	2kΩ	20kΩ	200kΩ
Measured V_{IN}			
Measured V_{R1}			
Measured V_{Rf}			
Measured V_{RL}			
Measured V_{RX}			

Table 3: Current Measurements and Calculations

Desired R_1	2kΩ	20kΩ	200kΩ
Measured V_{IN}			
Calculated I_{R1}			
Calculated I_{Rf}			
From KCL I_{-}			
Calculated I_{+}			
Calculated I_{RL}			
Measured I_{P}			
Measured I_{N}			
From KCL I_{OUT}			

Table 4: Saturation Point

Desired R_1	2kΩ	20kΩ	200kΩ
Measured V_{IN}			
Measured V_{R1}			

Follow-Up Questions:

1. For the three designs and for $V_{IN} = 2V$, determine
   a. The power consumed by the load resistor
   b. The power supplied by the $\pm 15V$ power supplies
   c. The power supplied by the input voltage source
   d. The efficiency considering part a the output power and parts b and c the input power. Which design is most efficient?

   e. That KCL holds for the op amp itself (sum of the currents in = sum of the currents out).

2. At what point does your amplifier exhibit saturation? If the gain was recalibrated for -10, the amplifier output will saturate at what input voltage?

3. If you redesign your inverting amplifier for a gain of -10 with $R_L = 4.7k\Omega$, predict the op-amp output current for $V_{IN} = 2.0V$