United States Naval Academy
Electrical and Computer Engineering Department
EE 221
Exam 1
28 September 2011

1. You must present your work completely and legibly to receive partial credit. You must show sufficient steps to justify intermediate results as well as final answers.
2. Put all your work on the exam. If you need more space than that provided, ask your instructor for paper. Write your answer clearly and use appropriate units. You have 50 minutes to work this examination.
3. **You are not permitted to discuss the contents of this exam until after 6th period today.**

Page	Value	Score
1	20	
2	10	
3	20	
4	25	
5	25	
Total	100	

Name Solution

I have neither given nor received assistance while completing this exam.

Signed and Dated

Short Answer Problems: Circle or fill-in the correct choice as appropriate.

(1) (10 points) The linear DC circuit below delivers maximum power to the load when $R_L = 1k\Omega$. The output voltage across a $1k\Omega$ load is 3V. If the value of R_L is doubled, such that $R_L = 2k\Omega$, what is the output voltage? **Justify your answer to receive any credit.**

a. 2V
b. 3V
c. 4V
d. 5V
e. Cannot be determined

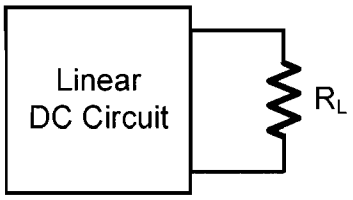

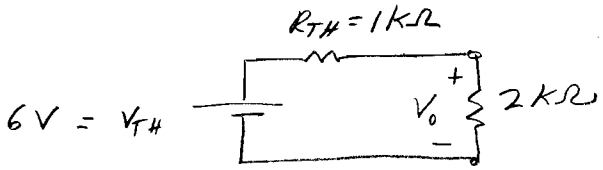

$$V_o = \frac{2k}{(1k + 2k)} 6 = 4V$$

(2) (10 points) Which equation correctly describes the output of the operational amplifier circuit shown below? **Justify your answer to receive any credit.**

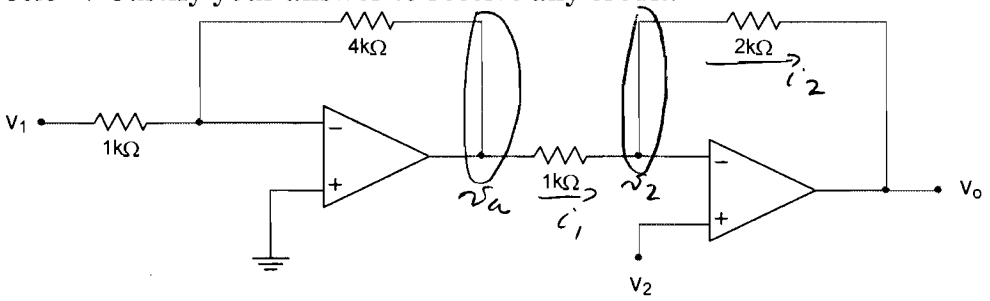

a) $v_o = 4v_1 + 2v_2$

b) $v_o = -8v_1 - 2v_2$

c) $v_o = -4v_1 + 3v_2$

d) $v_o = 8v_1 + 3v_2$

$$v_a = -\left(\frac{4}{1}\right) V_1$$

$$v_a = -4V_1$$

$$i_1 = i_2$$

$$\frac{v_a - v_2}{1K} = \frac{v_2 - V_o}{2K}$$

$$2v_a - 2V_2 = V_2 - V_o$$

$$V_o = 3V_2 - 2v_a$$

$$V_o = 3V_2 - 2(-4V_1)$$

$$V_o = 3V_2 + 8V_1$$

(3) (10 points) Fill in the table indicating the missing **voltage, current, or power** for each component in the circuit below. Indicate whether each component acts as a source (S) or as a load (L). Assume that power is conserved in the circuit. Pn (mW) indicates power ABSORBED.

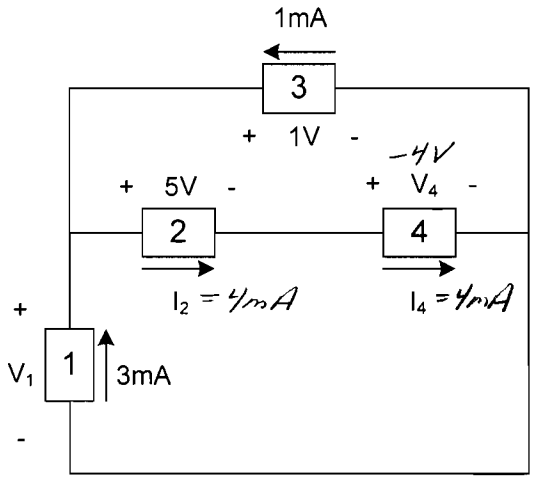

Component n	V_n(V)	I_n(mA)	P_n(mW)	S or L
1	1	3	-3	S
2	5	4	20	L
3	1	1	-1	S
4	-4	4	-16	S

(4) (20 points) In the circuit shown below, use **SUPERPOSITON** to solve for the current I. **NO CREDIT WILL BE GIVEN FOR ANY OTHER METHOD.**

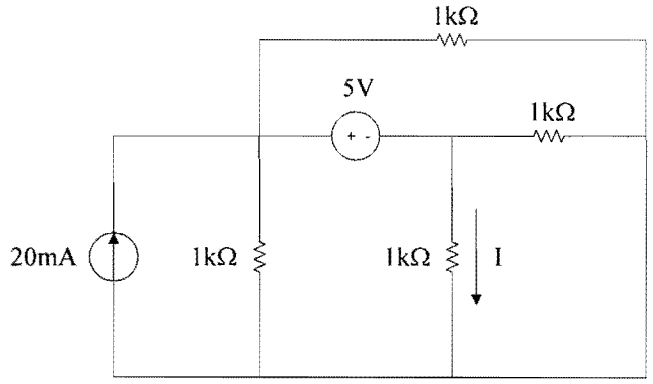

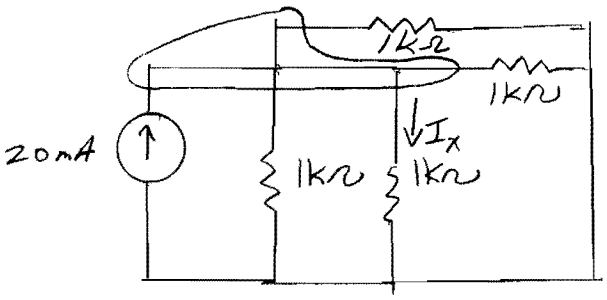

Current division

$I_x = \frac{20mA}{4} = 5mA$

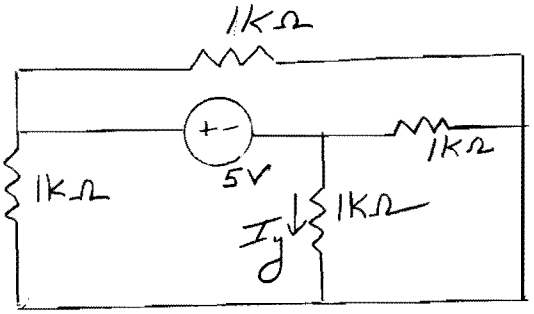

$V_y + 5 = V_x$

$V_y = -2.5V$

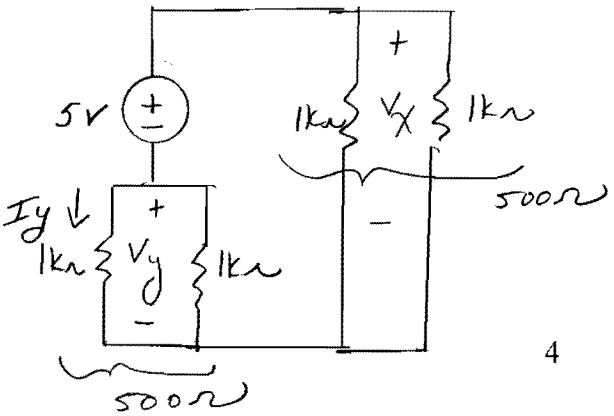

$I_y = \frac{V_y}{R} = \frac{-2.5}{1K} = -2.5mA$

$I = I_x + I_y$

I = 2.5mA

(5) (25 points) Given the circuit shown below, determine the value of I_1 using **NODAL ANALYSIS. Show all of your work. NO CREDIT WILL BE GIVEN FOR ANY OTHER METHOD.**

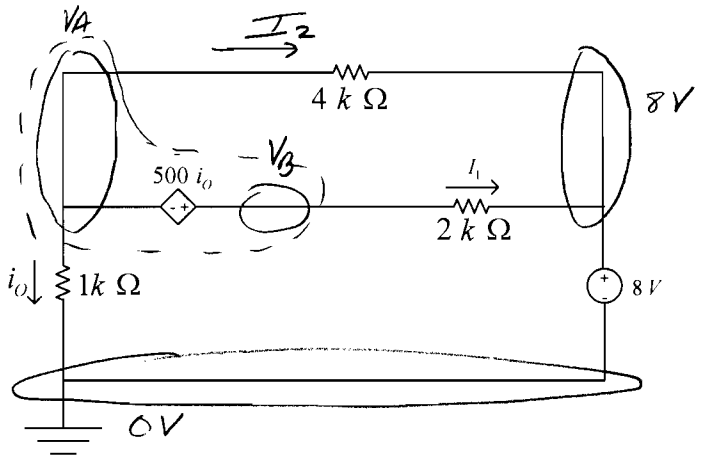

Supernode AB

KCL:

$$0 = i_o + I_2 + I_1$$

$$0 = \frac{V_A}{1K} + \frac{V_A - 8}{4K} + \frac{V_B - 8}{2K}$$

$$0 = 4V_A + V_A - 8 + 2V_B - 16$$

$$24 = 5V_A + 2V_B$$

KVL:

$$V_A + 500\, i_o = V_B$$

Dependent Source:

$$i_o = \frac{V_A}{1K}$$

$$\Rightarrow \quad V_A + \frac{500\, V_A}{1K} = V_B$$

$$1.5 V_A = V_B$$

$$24 = 5V_A + 2(1.5 V_A)$$

$$24 = 8V_A$$

$$V_A = 3V$$

and

$$I_1 = \frac{V_B - 8}{2K} = \frac{1.5V_A - 8}{2K}$$

$$I_1 = \frac{(1.5)(3) - 8}{2K} = -1.75\,mA$$

$I_1 =$ -1.75mA

(6) (25 points) Find the Thevenin Equivalent of the circuit shown below from the point of view of terminals a-b. **DRAW THE THEVENIN'S CIRCUIT** with appropriate values for full credit.

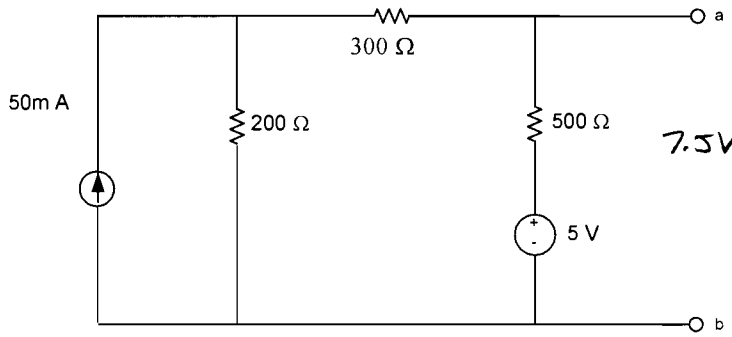

$7.5V = V_{TH}$

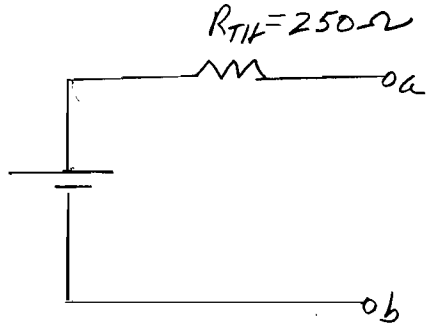

R_{TH}:

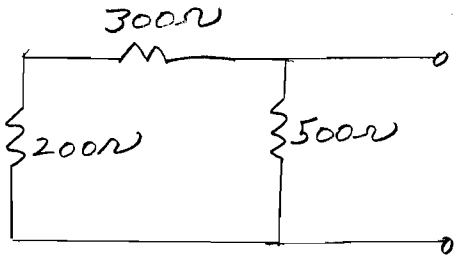

$R_{TH} = (200+300) \parallel 500 = 250\Omega$

V_{TH}

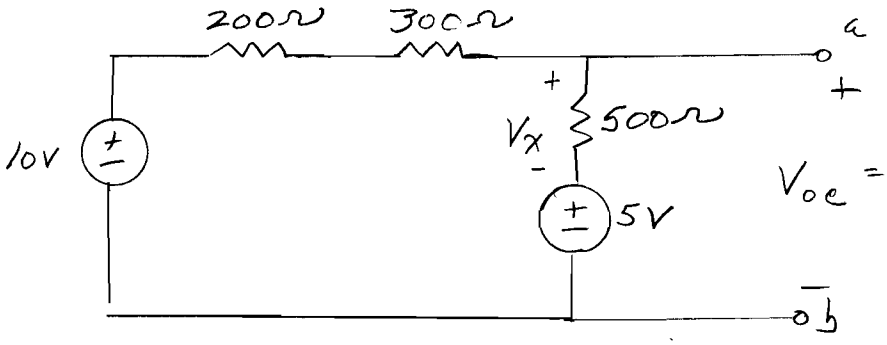

$V_{oc} = V_{TH}$

$$V_x = \left(\frac{500}{1K}\right)(10-5)$$

$$V_x = 2.5\ V$$

$$V_{oc} = V_{TH} = 5 + V_x = 7.5V$$