PROBLEM SET #9

Chapter 16, Solution 32.

(a) $Y(s) = H(s)\,X(s)$

$$= \frac{s+3}{s^2+4s+5}\cdot\frac{1}{s}$$

$$= \frac{s+3}{s(s^2+4s+5)} = \frac{A}{s} + \frac{Bs+C}{s^2+4s+5}$$

$$s+3 = A(s^2+4s+5) + Bs^2 + Cs$$

Equating coefficients :

s^0: $3 = 5A \longrightarrow A = 3/5$

s^1: $1 = 4A + C \longrightarrow C = 1 - 4A = -7/5$

s^2: $0 = A + B \longrightarrow B = -A = -3/5$

$$Y(s) = \frac{3/5}{s} - \frac{1}{5}\cdot\frac{3s+7}{s^2+4s+5}$$

$$Y(s) = \frac{0.6}{s} - \frac{1}{5}\cdot\frac{3(s+2)+1}{(s+2)^2+1}$$

$$y(t) = \underline{\left[\mathbf{0.6 - 0.6\,e^{-2t}\cos(t) - 0.2\,e^{-2t}\sin(t)}\right]\mathbf{u(t)}}$$

Chapter 16, Solution 33.

$$H(s) = \frac{Y(s)}{X(s)}, \qquad X(s) = \frac{1}{s}$$

$$Y(s) = \frac{4}{s} + \frac{1}{2(s+3)} - \frac{2s}{(s+2)^2+16} - \frac{(3)(4)}{(s+2)^2+16}$$

$$H(s) = s\,Y(s) = \underline{4 + \frac{s}{2(s+3)} - \frac{2s(s+2)}{s^2+4s+20} - \frac{12s}{s^2+4s+20}}$$

Chapter 16, Solution 38.

(a) Consider the following circuit.

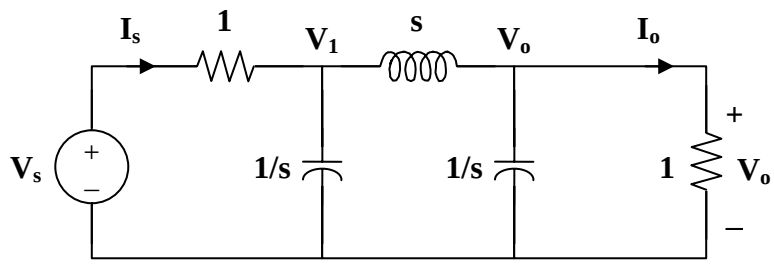

At node 1,

$$\frac{V_s - V_1}{1} = s\,V_1 + \frac{V_1 - V_o}{s}$$

$$V_s = \left(1 + s + \frac{1}{s}\right)V_1 - \frac{1}{s}V_o \qquad (1)$$

At node o,

$$\frac{V_1 - V_o}{s} = s\,V_o + V_o = (s+1)\,V_o$$

$$V_1 = (s^2 + s + 1)\,V_o \qquad (2)$$

Substituting (2) into (1)

$$V_s = (s + 1 + 1/s)(s^2 + s + 1)V_o - 1/s\,V_o$$

$$V_s = (s^3 + 2s^2 + 3s + 2)V_o$$

$$H_1(s) = \frac{V_o}{V_s} = \underline{\frac{\mathbf{1}}{\mathbf{s^3 + 2s^2 + 3s + 2}}}$$

Chapter 14, Solution 3.

$$0.2F \longrightarrow \frac{1}{j\omega C} = \frac{1}{s(0.2)} = \frac{5}{s}$$

$$0.1F \longrightarrow \frac{1}{s(0.1)} = \frac{10}{s}$$

The circuit becomes that shown below.

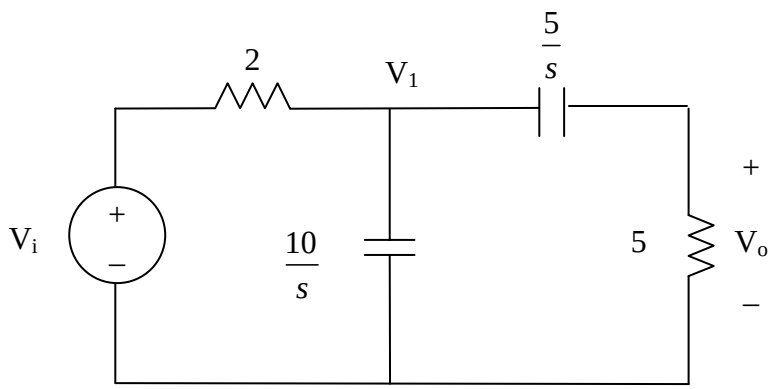

Let $Z = \frac{10}{s} // (5 + \frac{5}{s}) = \frac{\frac{10}{s}(5+\frac{5}{s})}{5+\frac{15}{s}} = \frac{\frac{10}{s}5(\frac{1+s}{s})}{\frac{5}{s}(3+s)} = \frac{10(s+1)}{s(s+3)}$

$$V_1 = \frac{Z}{Z+2}V_i$$

$$V_o = \frac{5}{5+5/s}V_1 = \frac{s}{s+1}V_1 = \frac{s}{s+1} \bullet \frac{Z}{Z+2}V_i$$

$$H(s) = V_o / V_i = \frac{s}{s+1} \bullet \frac{\frac{10(s+1)}{s(s+3)}}{2+\frac{10(s+1)}{s(s+3)}} = \frac{10s}{2s(s+3)+10(s+1)} = \underline{\frac{5s}{s^2+8s+5}}$$