EE228 Spring 2007

Problem Set #2

Problem 1: The output of a certain "notch" filter is given by

$$\tilde{V}_{out} = H\tilde{V}_{in}$$

where $H = \dfrac{j\left(LC\omega^2 - 1\right)}{j\left(LC\omega^2 - 1\right) + RC\omega}$ and $\tilde{V}_{in} = 5V\angle 60^\circ$ (Note ω is the frequency in radians/sec). The parameters of the filter are $R = 10\Omega$, $C = 100\mu F$, and $L = 1.43mH$. Determine the notch frequency (the frequency when the output voltage magnitude is minimum) and the frequencies at which the output magnitude is equal to 3.536V. Ensure that your frequency range is wide enough to capture that required data. Plot the characteristic (frequency versus output magnitude) and annotate your results on the plot.

Problem 2: Given the following circuit. The input voltage is a pulse that starts at 0V and steps upward to 10V at time equal to zero. The design of the circuit is to charge up the capacitor to 10V and not exceed the current capacity of the source. If the components are selected to provide a critically-damped response, it can be shown (once we know how to do Laplace!) that the maximum current is given by $I_{\max} = 0.736\dfrac{V_{step}}{R}$. The time required to charge is approximately $t_{charge} = \dfrac{16L}{R}$, and the capacitance is constrained to be $C = \dfrac{4L}{R^2}$. If $V_{step} = 10V$, $t_{charge} = 50ms$, and $I_{\max} = 1A$
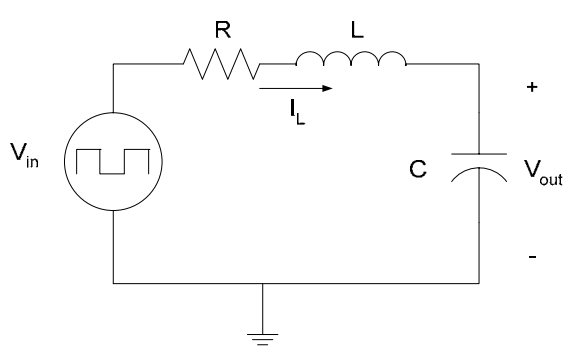
1. Determine required values of R, L, and C
2. Implement the circuit in Multisim
3. Run the simulation through 50ms using a max time step of 1e-5s.
4. Plot and record the current and output voltage (confirm the design equations). BONUS points if you plot the results in Matlab.