LAB EXPERIMENT #1

Part 1: The following is a light dimmer circuit where V_{IN} is the 60 Hz, 120Vrms wall outlet voltage, R_{bulb} represents the resistance of a light bulb, and the power switches effectively delay the application of the input voltage to the load (via the dimmer knob). Here we illustrate a delay of approximately 30 degrees.

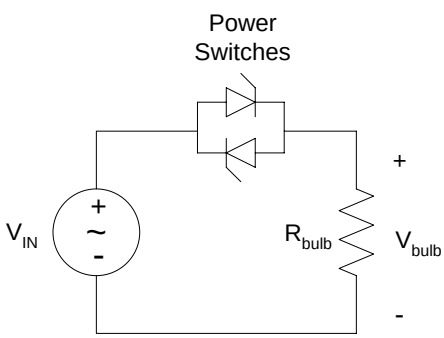

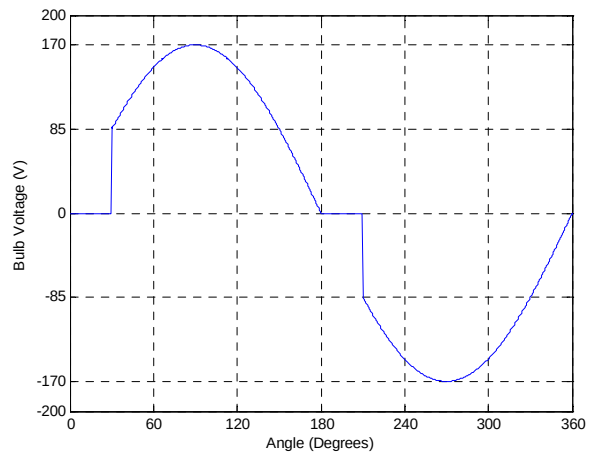

Task: Create a MATLAB M-file that generates the above bulb voltage plot for a user-inputted delay angle between zero and 180°, then calculates the RMS (root-mean-square) value.

1. The syntax for the MATLAB input command is

   >> delay_angle = input('Input the desired delay angle (degrees): ');

2. The bulb voltage tracks the input sinusoid except for the intervals $0^\circ \le Angle < Delay$ and $180^\circ \le Angle < 180^\circ + Delay$ where the voltage is equal to zero (Hints: the function sin requires an argument in radians; the find function can be used to identify the above intervals)
3. To compute the RMS value: we will first want to square the signal, next you will need to find the mean value of the result, then finally take the square root of that result (sqrt function).
4. Show results for 30°, 90°, and 150° (list the RMS value on the plot). Hand in your M-file as well. [Hint: the RMS value for a delay angle of 60° is 107.82V].

Part 2: In MULTISIM, build the following circuit. This circuit represents a "simple" representation for a rail gun pulse forming network. Energy is stored in the capacitor then released very quickly into the resistance which represents the armature (movable part) of the gun. Impose an initial condition of 400V on the capacitor. Initially set $R = 0.1\Omega$. The controllable switch should have an ON-STATE resistance of $1m\Omega$ and a voltage threshold of 1V. The pulse source should have an initially level of -1V and a pulse level of +2V. The pulse width should be 50ms and the period should be 100ms.

1. The capacitor should be sized so that there is initially 160J of stored energy prior to the switch closing
2. Size L so that when you execute the simulation the current pulse goes to zero at 20ms (the value of inductance will be between $1mH \le L \le 150mH$)
3. Double-click the capacitor to set the initial condition; when you choose Simulate-Analyses-Transient Analysis, select the Initial Conditions as User Defined; Use the max time step of 1e-4; run the simulation out to 30ms.

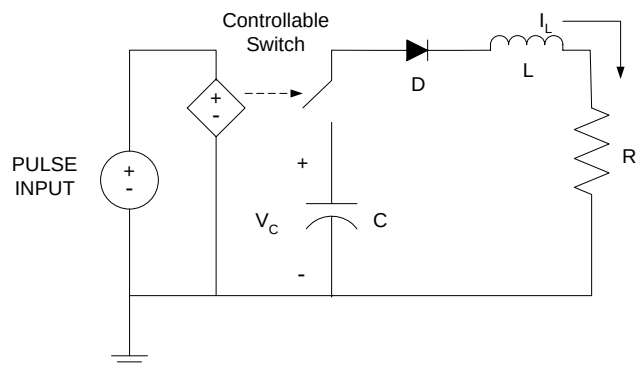

4. Once you determine the correct value for L, run the simulation for $R = 0.1\Omega, 1.0\Omega, 10\Omega$. Bring the data into MATLAB (via Excel) and plot all three current pulses on the same graph. Annotate your plot with a Legend (Insert Legend).
5. For one of the three resistance cases, plot the capacitor voltage. If C is an electrolytic capacitor, explain why this would be an ill-advised way to operate it.
6. Hand in your calculations for C, your Multisim circuit schematic and the Matlab plot.