EE228 Spring 2007

LABORATORY EXPERIMENT #7

Engineering Problem: We are asked to design, build and evaluate a simple passive low-pass filter. The circuit we are told to use is the following second-order RC-network (two energy storage components). A circuit only consisting of resistors and capacitors can only result in real pole locations (no complex pole locations).

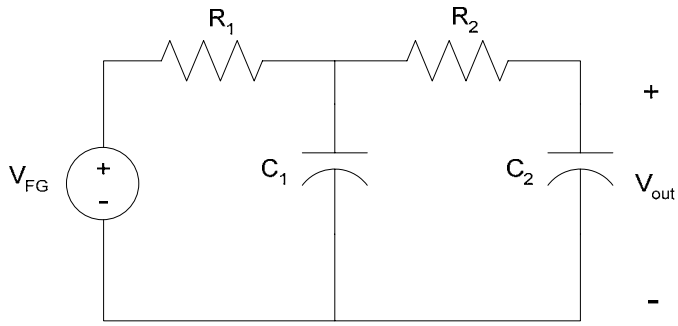

The transfer function for this circuit will have two poles, no zeros, and a gain constant of one. Let's assume that we wish for the second pole to be a factor of five times larger than the first so our "desired" transfer function becomes

$$H(s) = \frac{5\alpha^2}{(s+\alpha)(s+5\alpha)} = \frac{5\alpha^2}{s^2 + 6\alpha s + 5\alpha^2}$$

<u>Part 1: Analytical Design</u>

1. Given the desired transfer function above, what is the maximum gain and at what frequency does it occur? (Hint: Evaluate the absolute magnitude expression and draw your conclusion from it)
2. Given the desired transfer function form above, solve for the value of α that places the cutoff frequency at 2150Hz. (Hint: set $s = j\omega$ in H(s) above, find the magnitude expression, plug in the required ω (not Hz!), then set this equal to $\frac{1}{\sqrt{2}}$ max value and solve for the required α. Your calculator can help with the last step). The α result should lie somewhere between 10,000 and 15,000).
3. Find the transfer function for the circuit above in terms of the parameters R_1, C_1, R_2, and C_2 (Hint: Thevenin might be the easiest approach to arrive at a series circuit, but remember to find both the Thevenin impedance and the Thevenin voltage!)
4. Match the desired transfer function that results from Step 2 with the actual transfer function of Step 3. If $R_1 = 20k\Omega$ and $C_1 = 0.002\mu F$, solve for the required values of R_2 and C_2.
5. Have the instructor verify your values: _____

Part 2: Evaluate the Design

1. Build the low-pass filter circuit using standard capacitor values and at most two resistors in series to realize R_1 and R_2. The Function Generator is the input source. Make sure to *measure and record the actual values of the resistors and capacitors*.
2. Measure the input voltage and output voltage at the following frequencies (all in Hz): 50, 100, 200, 500, 1000, 1800, 1900, 2000, 2100, 2200, 2300, 2400, 5000, 10k, 20k, 50k, 100k, and 200k. Calculate the resulting gain in absolute and then in dB.

3. After establishing the maximum gain at low frequencies, calculate the required gain at the cutoff frequency.
4. Adjust the function generator frequency to precisely establish the frequency at which this gain occurs.

   Demonstrate your measurement to the instructor: _____

Part 3: Theoretical Gain Plot

1. Given the theoretical transfer function that you derived from the circuit (Part 1 Step 3) and the actual measured parameters, create a Matlab M-file that generates the magnitude characteristic from f = 100Hz to f = 1MHz. Note,

   - This time assign a variable f using the logspace command
   - Create w from f (by converting from Hz to rad/s)
   - Assign the parameters R1, R2, C1, and C2
   - Define the transfer function numerator and denominator polynomial vectors
   - Evaluate these polynomials using the polyval function at j*w
   - Divide the numerator and denominator results element by element
   - Use the abs and log10 functions to find the magnitude in dB
   - Use semilogx to plot f versus the dB result

2. Mark the recorded hardware data points (Part 2 Step 2) on the magnitude characteristic.
3. What is the percent error in the achieved cutoff frequency? If the DC gain is other than one, suggest one reason for the difference. What is the high-frequency slope (dB/decade) as found using your data (show the calculation)?