EE228 Spring 2007

LABORATORY EXPERIMENT #8

Engineering Problem: We are asked to design, build and evaluate a 1.8kHz sine-wave generator. To guide us in this activity, consider the following tasks. We will first design and build a 1.8kHz monostable multivibrator with a 555 timer chip. This circuit will provide a 1.8kHz square-wave and pseudo triangle-wave at different points in the circuit. We will then filter these signals to arrive at the desired sinusoid. To accomplish the signal conditioning, we will design and evaluate two different bandpass filters and apply them to the two available signals to see which yields the best sinusoid.

Requirement: Work in teams of two or at most three. One student should take the lead on each task.

Task 1: Design and implement a 1.8kHz monostable multivibrator with a 50% duty cycle using a 555 timer chip. The circuit and 555 pinout are provided below (note, pin 1 is indicated by either a circle or will be to the left of the notch looking down at the chip). Further note that the wiper arm of the potentiometer is connected to pin 7 (this is the center pin on the three-terminal component).

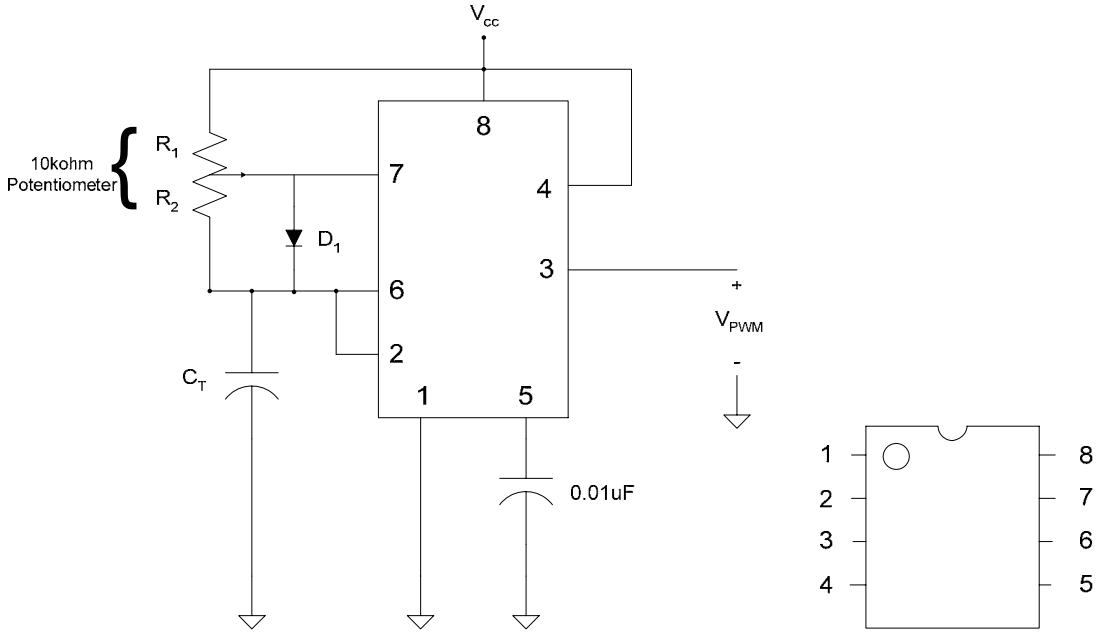

(a) (b)

Figure 1: (a) Monostable Multivibrator Circuit (b) Pin-Out for the 555 Timer IC

The idealized circuit waveforms are given in Figure 2, where V_{cc} is the DC power supply voltage. These are the voltage signals that we will filter to produce the sine wave.

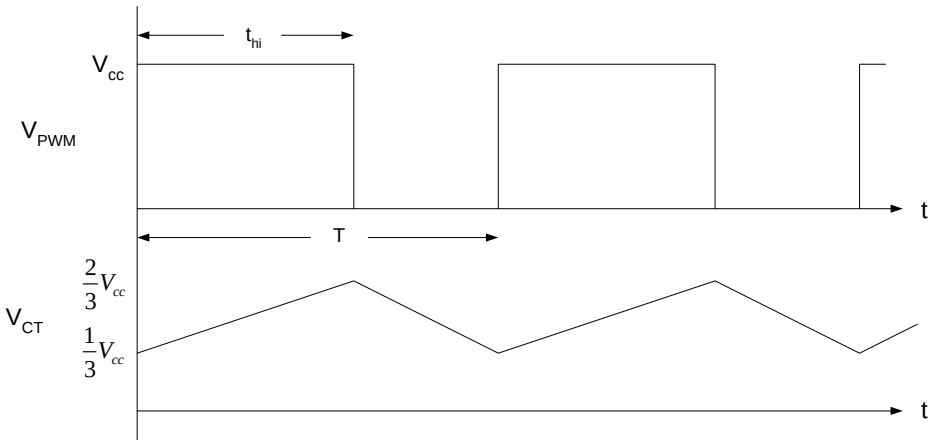

Figure 2: Ideal Monostable Multivibrator Waveforms

The equations governing this circuit for the output frequency and the duty cycle are

$$f = \frac{1}{T} = \frac{1}{0.695(10k)C_T} \qquad D = \frac{t_{hi}}{T} = \frac{R_1}{R_1 + R_2} = \frac{R_1}{10k\Omega}$$

- Determine the value of C_T that will provide an oscillation frequency of 1.8kHz
- Build the circuit on your protoboard using $V_{cc} = +15V$ and adjust the potentiometer setting to achieve a duty cycle of 50%
- Sketch the voltages at pin 3 and pin 6 (relative to ground)
- *Show the PWM signal to your instructor*

<u>Task 2:</u> Design, build, and evaluate the following Butterworth band-pass filter. The filter should have a center frequency of 1.8kHz and should utilize only 1nF ($0.001\mu F$) capacitors.

- Derive the transfer function for the circuit of Figure 3
- Determine the center frequency and bandwidth
- Scale the center frequency to the desired value
- Determine the magnitude scaling from the required capacitor value
- Measure component values (ensure that they are "close" to the required values or else the filter characteristics will not match)
- Build the circuit and using the function generator as the input, evaluate the center frequency. If you diverge by more than 5%, "tweak" the parameter values
- *Demonstrate your center frequency measurement to your instructor*

- Measure and record the bandwidth
- Insert a voltage follower between the 555 circuit and the butterworth filter
- *Demonstrate the output of the filter with the input being* V_{PWM} *and then the input being* V_{CT}. Which input yields a more sinusoidal output? Why?

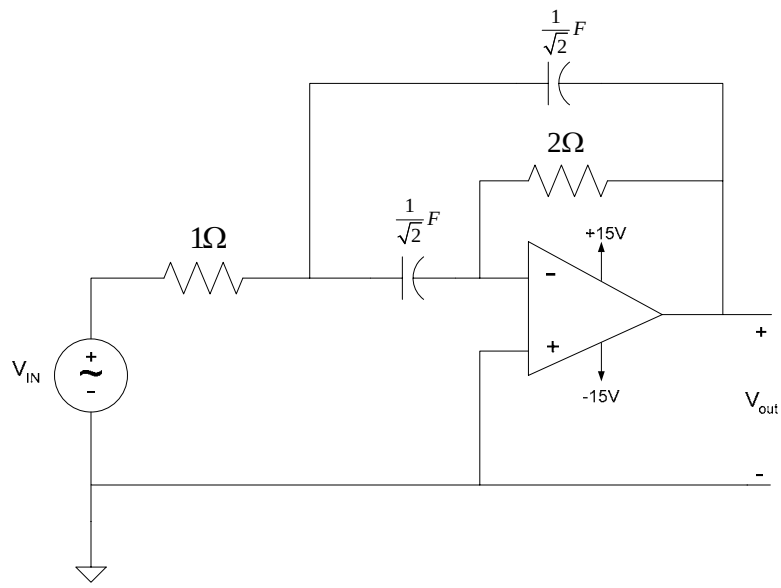

Figure 3: Butterworth Band-Pass Filter

<u>Task 3:</u> Design, build, and evaluate a high-Q band-pass filter. The filter should have a center frequency of 1.8kHz and a Q = 10. Use the circuit shown in Figure 4.

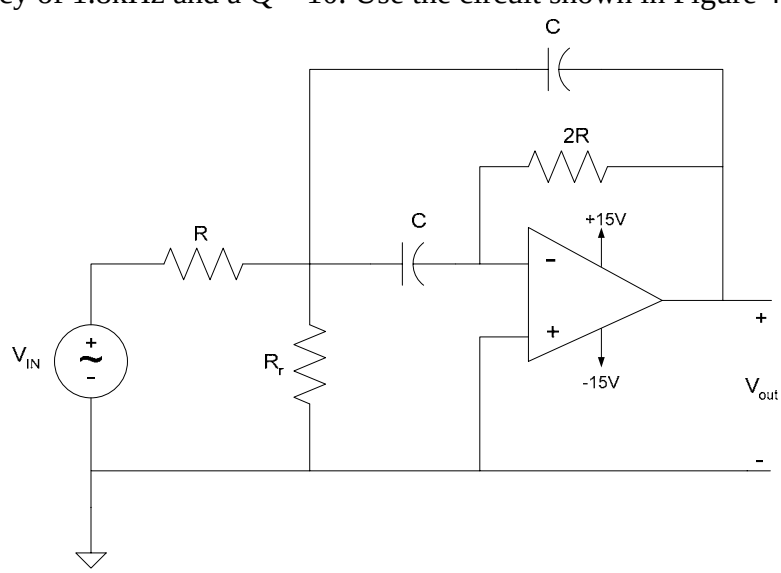

Figure 4: High Q Band-Pass Filter Circuit

This circuit was analyzed in class. We derived that the center frequency (in radians/sec) and Q were given by

$$\omega_o = \sqrt{\frac{R+R_r}{2R_r R^2 C^2}} \qquad\qquad Q = \sqrt{\frac{R}{2R_r} + \frac{1}{2}}$$

- Given we are restricted to using $C = 10nF = 0.01\mu F$, derive the required values for R and R_r
- Measure the component values (significant divergence from the desired values will cause the filter to not achieve the required center frequency or Q)
- Build the circuit using the function generator as the input. Measure the center frequency and ensure that it is within 5% of the prescribed value
- Measure and record the bandwidth and calculate the resulting Q of the circuit
- *Demonstrate your measurements to the instructor*
- Couple the circuit to the 555 timer via a voltage follower. *Demonstrate the circuit to your instructor with the input being* V_{PWM} *or* V_{CT} . Which input provides a more sinusoidal output?

Note: Record all data necessary to support that your design works. Disassemble circuits only after the instructor has made the required observations. After completing the exercise, please return all parts back to their original locations.