United States Naval Academy
Electrical Engineering Department
EE241: Electronics I

EXAM I

1. Put your name on the test.
2. There should be 7 pages, including the cover sheet and the equation sheet at the back.
3. Show all your work to receive maximum partial credit. If you make an assumption, state it. Express your answers with proper units.
4. You have 50 minutes to complete the exam.
5. Each page is scored as follows:

Page	Points	Score
2	30	
3	20	
4	18	
5	12	
6	20	
Total	100	

Name:_____

Short Answer Questions:

1. (12 points) **Fill in the blanks.**

a) A certain _____ amplifier has a short circuit gain of 100mA/V. Ideally, the input resistance of this amplifier is _____, and its output resistance is _____.

b) The voltage characteristic of a Schmitt Trigger is represented by a _____ loop. It is the result of _____ feedback.

c) Diodes that are intended to operate in reverse breakdown are called _____.

2. (6 points) **Circle true or false.**

a) **True/False** Since a capacitor is used to block DC, increasing the value of the capacitance at the output of a rectifier circuit increases the magnitude of the ripple voltage.

b) **True/False** Capacitors are placed in parallel between each stage of an AC-coupled amplifier cascade.

c) **True/False** With negative feedback the differential input voltage and the input current of a real operational amplifier are forced toward zero.

3. (4 points) **Circle the correct answer.** The differential gain of a certain amplifier is 60dB, and the common mode gain is -80dB. The common mode rejection ratio for this amplifier is

a) -20dB b) -140dB c) +140dB d) +20dB e) none of the above

4. (4 points) Briefly explain why a load line is used in the analysis of a diode circuit.

5. (4 points) Briefly explain the meaning of the term "**Peak Inverse Voltage (PIV)**".

Problems:

1. (20 points) An electronic speedometer generates a voltage signal $v_{in}(t)$ that is proportional to the velocity. The signal increases by 1V if the velocity increases by 10 mph. Design an accelerometer circuit that produces an output voltage $v_{out}(t)$ that is proportional to acceleration. The circuit should generate an output signal of 0V if the velocity is constant. A change in the output of +1V should correspond to an acceleration +2 mph/s.

2. (30 points) A certain audio amplifier should pass frequencies up to 10kHz. The specifications of the LM741 op-amp used in the amplifier are as follows:

Maximum Output Voltage Swing:	±13V
Maximum Short Circuit Current:	±25mA
Slew Rate:	0.5V/μs
Unity Gain Bandwidth:	1.5MHz
Input Bias Current:	80nA
Input Offset Current:	20nA
Input Offset Voltage:	1mV

a) (6 points) In a non-inverting configuration, what is the largest gain that can be expected with a single amplifier stage?

b) (12 points) If the load is an 8Ω speaker, what is the largest output voltage amplitude for a 10kHz sine wave without distortion? (Hint: Consider voltage, current and slew rate limits.)

c) (12 points) If resistors in the circuit are limited to 10kΩ or less and the required gain in the non-inverting configuration is at least 100, which DC impairment has the most significant impact on the amplitude of the output? Quantitatively justify your answer.

3. (20 points) Determine the voltage and current for each diode in the circuit shown below. Assume the diodes are ideal. **Clearly indicate your answers.**

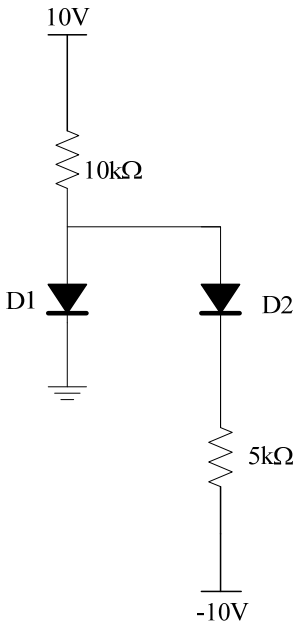

SOME EQUATIONS

Some Op-Amp Expressions:

Standard integrator: $v_{out}(t) = -\frac{1}{RC}\int v_{in}(t)dt$

Standard differentiator: $v_{out}(t) = -RC\frac{dv_{in}(t)}{dt}$

Op-Amp Limits:

$$f_t \approx A_{0CL} f_{BCL}$$

$$f_{BCL} = \frac{f_t}{1 + R_2/R_1}$$

$$f_{FP} = \frac{SR}{2\pi V_{o,\max}}$$

$$CMRR = 20\log\left(\frac{|A_{vdiff}|}{|A_{vcm}|}\right)$$

Peak Rectifier Equations:

$C = \frac{I_L}{fV_r}$ for half-wave rectifier

$C = \frac{I_L}{2fV_r}$ for full-wave rectifier