Short answer questions:

1. (4 pts) Circle true or false for each statement below:

True False CMOS is used for complex digital integrated circuit design because the static power dissipation of a CMOS logic gate is minimal.

True False An increase in the fanout may not impact the power dissipation if there is a corresponding decrease in the switching frequency of the logic gates.

2. (6 pts) Fill in the blanks. When biased above threshold, the channel of a MOSFET behaves like a _____ if the voltage between the drain and the _____ is relatively small. In this case, the FET is biased in the _____ region.

3. (4 pts) Identify the relationships between V_{OH}, V_{OL}, V_{IH}, and V_{IL} that are required to insure that the noise margins NM_H and NM_L are positive,

4. (6 pts) Given V_{GS} = 4V, V_{to} = 2V, KP = 50 μA/V^2, L = 10 μm and W = 400 μm, determine the value of V_{DS} where the FET transitions between the triode and saturation regions.

5. (10 pts) Given a source voltage of 5 V, a drain resistance of 1 kΩ, and a switching frequency of 10 MHz, determine the gate capacitance required to support rise times less than 10 ns and dynamic power consumption less than 1 mW per logic gate.

Problems:

1. (25 pts) Assume the threshold voltage is V_{to} = 1 V for the MOSFET in the circuit below, and that the device parameter K = 0.5 mA/V^2. Assume the transistor is in saturation, and use the appropriate transistor equation and the load-line equation to find the drain current I_{DQ} and drain-source voltage V_{DSQ} at the operating point Q.

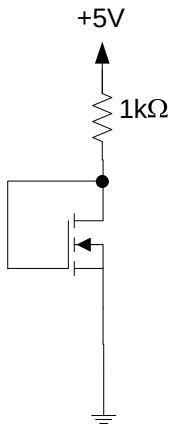

2. (25 pts) Design a resistor pull-up NMOS inverter that meets the following specifications:

$V_{OL} = 0.4$ V	$K = 12\ \mu A/V^2$
$V_{OH} = V_{DD} = 5$ V	$P_{static} = 0.2$ mW

Determine both the value of the pull-up resistor that is needed, as well as the threshold voltage required in the MOSFET. Draw the final circuit.

3. (20 pts) Consider the two logic circuits shown below. Fill in the output voltages in each truth table and determine the logic function implemented by each circuit.

a) (8 pts)

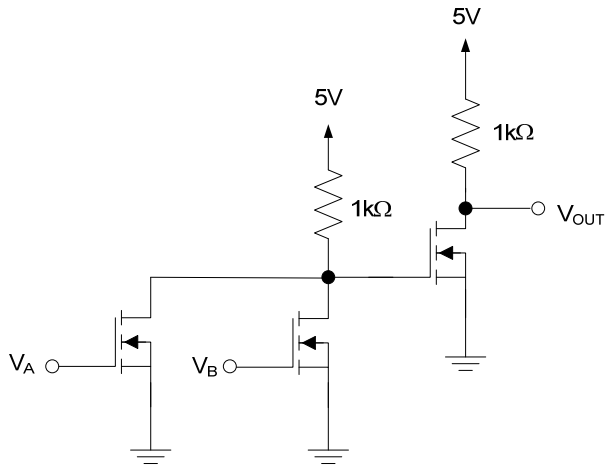

V_A	V_B	V_{OUT}(V)
0V	0V	
0V	5V	
5V	0V	
5V	5V	

OUT = f(A, B) = _____

b) (12 pts)

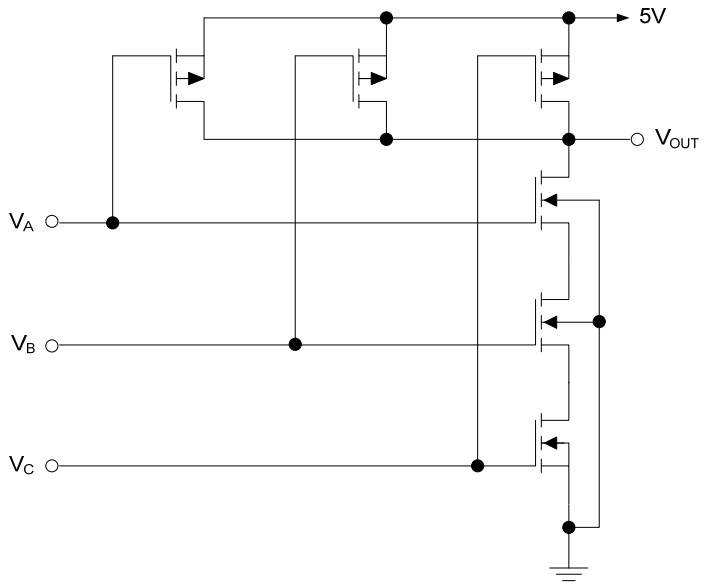

V_A	V_B	V_C	V_{OUT}(V)
0V	0V	0V	
0V	0V	5V	
0V	5V	0V	
0V	5V	5V	
5V	0V	0V	
5V	0V	5V	
5V	5V	0V	
5V	5V	5V	

OUT = f(A, B, C) = _____

SOME EQUATIONS

$$K = \left(\frac{W}{L}\right)\frac{KP}{2}$$

$$KP = \mu_n C_{ox}$$

$$i_D = K[2(v_{GS} - V_{to})v_{DS} - v_{DS}^2], \quad 0 \le v_{DS} \le v_{GS} - V_{to}$$

$$i_D = K(v_{GS} - V_{to})^2, \quad v_{DS} \ge v_{GS} - V_{to}$$

$$P_{dynamic} = f C V_{DD}^2$$

$$R_{on} = \frac{1}{2K(v_{GS} - V_{to})}$$

$$t_{PLH} = 0.6931 R_D C$$