EE241 Laboratory Exercise
Operational Amplifiers

Instruments
Digital Multimeter
Oscilloscope
Protoboard
Function Generator

Components
Resistors – Standard values
LM741 Op-Amp
CdS Photoresistors
12VDC Piezo Buzzer (digikey part no. 102-1119-ND)

Pre-Lab

Part I: Digital to Analog Conversion

1. Adapt a summing amplifier circuit to implement a 3-bit digital-to-analog converter (DAC) which accepts 3 input voltages (tied either to ground for '0' or to 5V for '1') and produces an output voltage ranging from 0 to –14 V. Create a table of all of the possible input combinations and the expected resulting output voltage for this DAC. (You may look in the textbook and on the web for help).
2. Simulate your design in Multisim to confirm its operation.

Part II: Op-Amps Behaving Badly

3. Look up the LM741 data sheets to determine the connection diagram, output voltage swing, output short circuit current, slew rate, unity-gain bandwidth ("bandwidth" in the datasheets), input bias current, input offset current, and input offset voltage. Assume the 741 will be powered by +/- 15 V.
4. Design a non- inverting op-amp circuit with a nominal gain of 10 using resistors > 1 kΩ.
5. Now consider the limits of the op-amp's operation:
    a. What is the bandwidth for this amplifier? (Think: Bandwidth is defined a couple ways – which applies?)
    b. For a frequency of 1 kHz and a load, R_L = 1 kΩ, what peak output voltage is possible without distortion?
    c. For a frequency of 1 kHz and a load, R_L = 100 Ω, what peak output voltage is possible without distortion?
    d. For a frequency of 50 kHz and a load, R_L = 1 kΩ, what peak output voltage is possible without distortion?
6. If you neglect the bias-current-effect-canceling resistor in the design of the non-inverting op-amp, what is the worst case DC output voltage that you would expect to see when the input is set to zero?
7. Modify your design to include the bias-current-effect-canceling resistor. Now what do you expect the worst-case DC output voltage to be (in the case where the input is set to zero)?

Part III: Prepare to Build a Burglar Alarm

8. Review lab 1. Design a simple circuit that uses a photoresistor from that lab and a battery with voltage V_{batt} to create a signal that is $<0.5V_{batt}$ in ambient light, and $> 0.5V_{batt}$ in the dark.
9. Battery capacity is often specified as A-h. Is this a measure of power, energy, or current? If a battery is rated as having 0.4 A-h, how long could you power a circuit that draws 10 mA?

Part I: Now build a D/A converter

1. Build your DAC that you designed in the pre-lab and measure its output for all possible input combinations. Check that it matches what you expected from the pre-lab. Explain any discrepancies.

Part II: Watch op-amps behave badly

2. Build the non-inverting amplifier you designed in the pre-lab, without the bias current compensating resistor. Check that the amplifier is performing properly by using a 1V peak, 1 kHz sine wave as an input and observing the input and output on the oscilloscope.
3. Set the input to ground and measure the worst case DC output voltage that results from the DC imperfections. Then add in the bias current compensating resistor and repeat the measurement.
4. Measure all of the operating limits that you considered in question 5 of the pre-lab.
5. Devise an experiment to measure the slew rate of the op-amp. Record your procedure and results.

Part III: Fun with Comparators: Build a burglar alarm

6. Build the comparator circuit shown in Fig. 1 below. Vary the input voltage and confirm that the comparator is behaving as you expect.

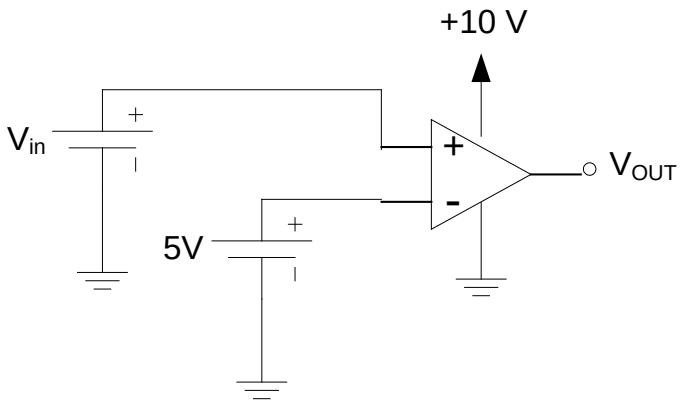

Figure 1: Simple comparator circuit

7. Use a comparator, buzzer, resistors and a photoresistor to build a circuit that buzzes when a hand is passed over the top of the light sensor. Your design should include at least one variable resistor that can be used to tune the sensitivity of the system. (You may note that the 'low' state will still cause the buzzer to hum, you can 'fix' this by adding resistance in series with the buzzer. We'll explore more elegant solutions once we understand diodes and BJTs)
8. Now modify your design to use a single 9V source.
9. Determine the current draw from the 9V source in both 'on' and 'off' states. A typical 9V battery contains about 0.4 A-h. Determine about how long your circuit could run off of such a battery.
10. Demonstrate your working circuit to the instructor.