PE 11

DC Machines Worksheet

(Updated 26 SEP 2008)

A Practical Exercise Name:_____ Section: _____

I. Purpose.

1. Review basic permanent magnetic DC motor principles of operation

II. Equipment.

None

III. Preparation.

Read supplements for DC Motors

IV. Lab Procedure.

You must **read** and complete each step.

Step One: DC Linear Motor

Given a frictionless linear motor (Figure 1) where a uniform magnetic field (**B = 2.5 T**) is applied perpendicular (into the page) to the current in the moveable shuttle. Answer the questions below.

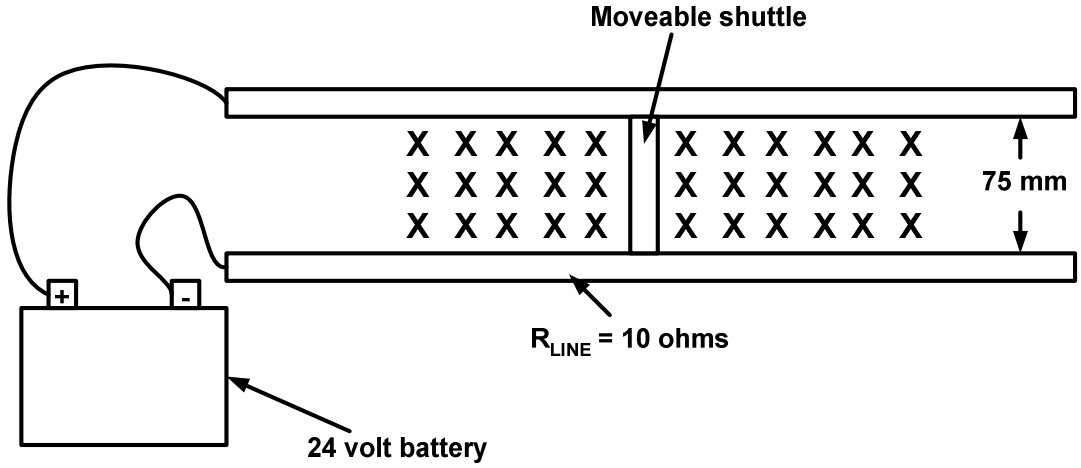

Figure 1

☐ What direction will the shuttle move? _____

☐ Assuming that the shuttle starts at rest, what is the initial value of current when the battery voltage is first applied? _____

☐ If the shuttle accelerates to **2 m/s**, stops accelerating, and the magnitude field remains perpendicular, how much force was developed by this linear motor and how much induced voltage was developed across the shuttle?

_____

_____

☐ What keeps the shuttle from constantly accelerating? _____

☐ Using the information provided, draw a circuit equivalent of this linear motor to include known resistive values, voltage supply, and EMF.

Step Two: DC Motor Torque

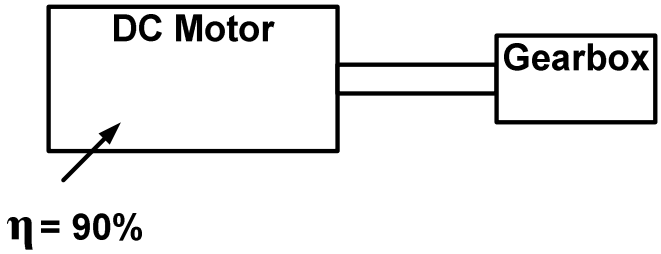

Figure 2

☐ The DC Motor (Figure 2) is governed to rotate the gearbox at a constant speed (**1,800 rpm**). If the DC Motor is powered by **120 V** and is currently drawing **7 amps**, is the gearbox exceeding its rated torque limit of **3.5 Nm**? **Yes** or **No** Justify your answer in the space below.

Step Three: DC Motor

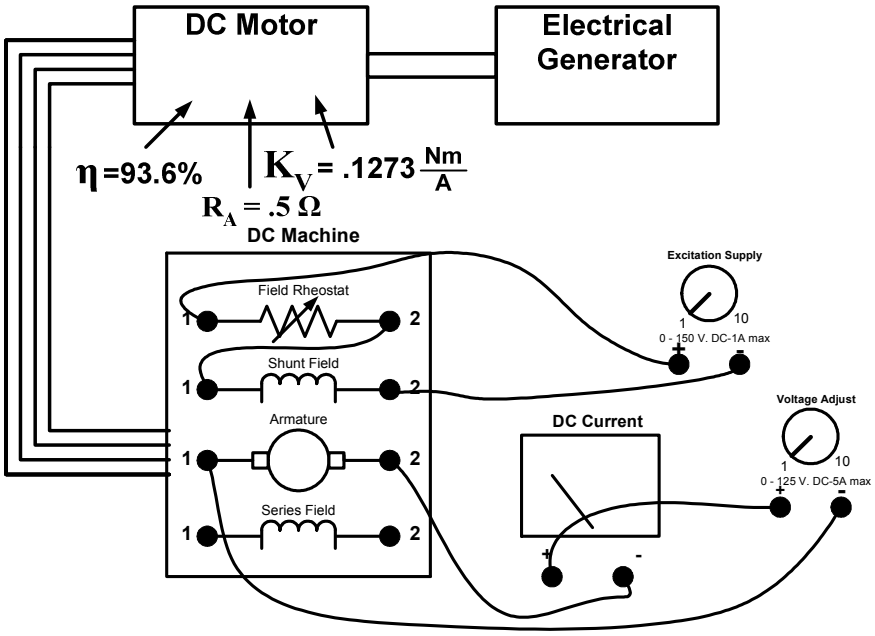

Figure 3

☐ Assume that we connected our Hampen DC Motor (Figure 3) to an electrical generator, and we operated the generator at **3,600 rpm**. If we measured the load torque on the DC motor to be **.496 Nm**, how many volts will be supplied to the DC motor? (Note that the excitation supply is fixed and the total mechanical losses in the DC motor are **4.8 W**.)

_____ **V**