PE 18

AC Series and Parallel Circuits

(Updated 29 OCT 2008)

A Practical Exercise Name:_____ Section: _____

I. Purpose.

1. Review the graphing of impedances, voltages and current as phasors.
2. Introduce the calculation of total impedance for AC series/parallel circuits.
3. Introduce the use of Kirchhoff's current law and the current divider rule in the analysis of AC series/parallel circuits

II. Equipment.

Agilent 34401A Digital Multimeter (DMM)
Oscilloscope
Function Generator
220-Ω resistor
1-mH inductor
100-Ω resistor
.1-μF capacitor

III. Preparation.

IV. Lab Procedure.

You must **read** and complete each step.

Step One: Total impedance

☐ Compute the total impedance as seen by the ac power source, e(t) = 5 sin{2 π (15kHz)t}, of the ac series parallel circuit in Figure 1. Note: Use the DMM to determine the internal coil resistance of the inductor.

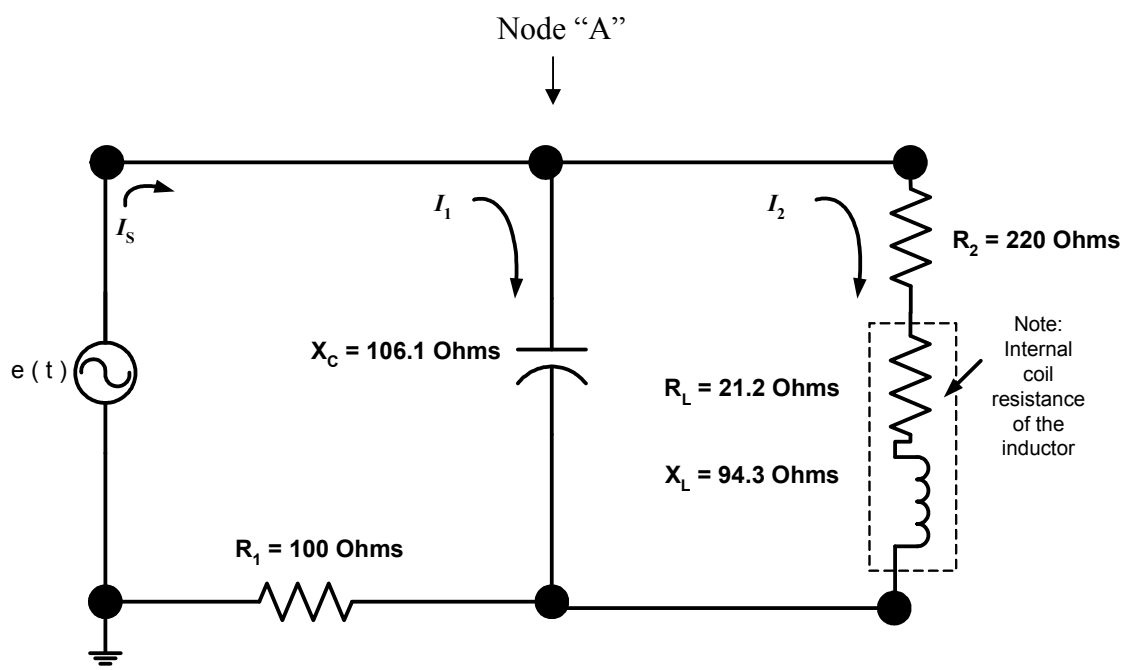

Figure 1

$\mathbf{Z_C}$ = _____ $\mathbf{Z_{R1}}$ = _____

$\mathbf{Z_{R2}}$ = _____ $\mathbf{Z_L}$ = _____

$\mathbf{Z_T}$ = _____

Step Two: Current divider rule

☐ Write your source voltage ($\mathbf{E_S}$) in phasor form.

$\mathbf{E_S}$ = _____

☐ Using Ohm's law, the source voltage ($\mathbf{E_S}$) and your predicted total impedance ($\mathbf{Z_T}$), calculate the current at the ac power source, and each branch current.

$\boldsymbol{I_S}$ = _____

☐ Use the current divider rule to determine each branch current.

$\boldsymbol{I_1}$ = _____

$\boldsymbol{I_2}$ = _____

Assuming that the ac power source e(t) has zero phase angle, is $\boldsymbol{I_S}$ leading or lagging $\mathbf{E_S}$?

leading or lagging

Step Three: Construct an AC series parallel circuit

☐ On a QUAD board construct the ac series/parallel circuit in Figure 1.

☐ Verify that the function generator is set to a sine wave with 3.536 V_{RMS} at 15 kHz.

☐ Connect your oscilloscope so that CH 1 will measure the ac voltage source and CH 2 will measure the ac voltage across resistor R_1.

☐ *Compensate for loading*. Loading is a drop in output voltage of the power supply when non-zero current is demanded of the power supply. Loading is a consequence of the internal resistance in any non-ideal power supply. Loading becomes more significant as the current supplied by the source increases. The AC power supply (function generator) is set to produce a sine wave with a certain V_{pp}. It would do just that if it were it unloaded (no circuit attached so that it supplies no current). With the function generator attached to the circuit and the oscilloscope connected, measuring V_{pp} from the function generator will show that supplied voltage is noticeably less than the programmed V_{pp}. *Compensate for loading by adjusting the function generator's programmed V_{pp} until the measured V_{pp} is as specified in Figure 1.* This compensation is necessary to obtain results that are comparable to your predictions.

☐ Measure the phase difference between $\mathbf{E_S}$ and $\mathbf{V_{R1}}$ using $\Delta\theta = (\Delta t \times 360^\circ) / T$.

$$\Delta\theta = _____$$

☐ Measure the amplitude of the voltage across R_1 and then write $\mathbf{V_{R1}}$ in phasor form.

$$\mathbf{V_{R1}} = _____$$

Step Four: Verify calculated $\boldsymbol{I_2}$ and $\boldsymbol{I_3}$

☐ Using KVL, calculate the voltage across the capacitor $\mathbf{V_C}$.

$$\mathbf{V_C} = _____$$

☐ Using Ohm's Law, your calculated ac voltage $\mathbf{V_C}$, and your impedances in each branch, determine $\boldsymbol{I_1}$ and $\boldsymbol{I_2}$.

$$\boldsymbol{I_1} = _____ \qquad \boldsymbol{I_2} = _____$$

☐ Sketch $\boldsymbol{I_1}$ $\boldsymbol{I_2}$ and $\boldsymbol{I_S}$ in Figure 2.

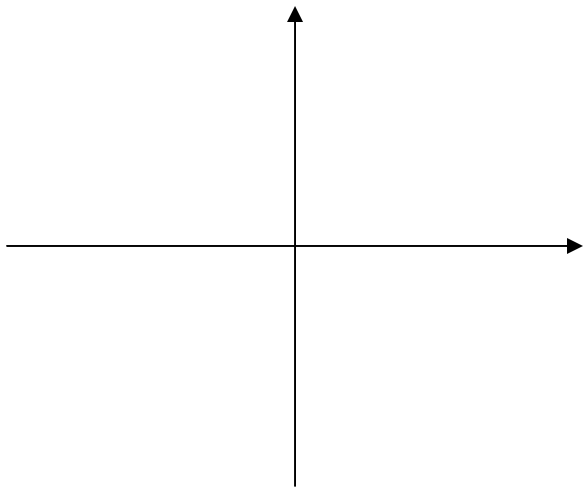

☐ Verify Kirchhoff's Current Law at Node A

$$\Sigma\, I_{\textbf{entering node}} = \Sigma\, I_{\textbf{leaving node}}$$

$$\Sigma\ \underline{\qquad\qquad\qquad} = \Sigma\ \underline{\qquad\qquad\qquad\qquad}$$