| PE 21 |
|---|

# Introduction to Three Phase AC Generators and Loads (*Updated 14 NOV 08*)

*A Practical Exercise* Name:_____ Section: _____

**I. Purpose.**

1. Introduce a four-wire, three-phase wye-to-wye circuit.
2. Introduce line-to-line voltages, line-to-neutral voltages, and line currents.
3. Review AC power.

**II. Equipment.**

**Agilent 34401A** Digital Multimeter (DMM)
Oscilloscope
Hampden Power Panel
Hampden Resistor Load

**III. Preparation.**

Review safety brief.

**IV. Lab Procedure.**

You must **read** and complete each step.

**Step One**: Construct a Wye Circuit

☐ Locate the resistor load on top of your work bench.

☐ Construct a wye connected purely resistive load by connecting the neutral points of the loads

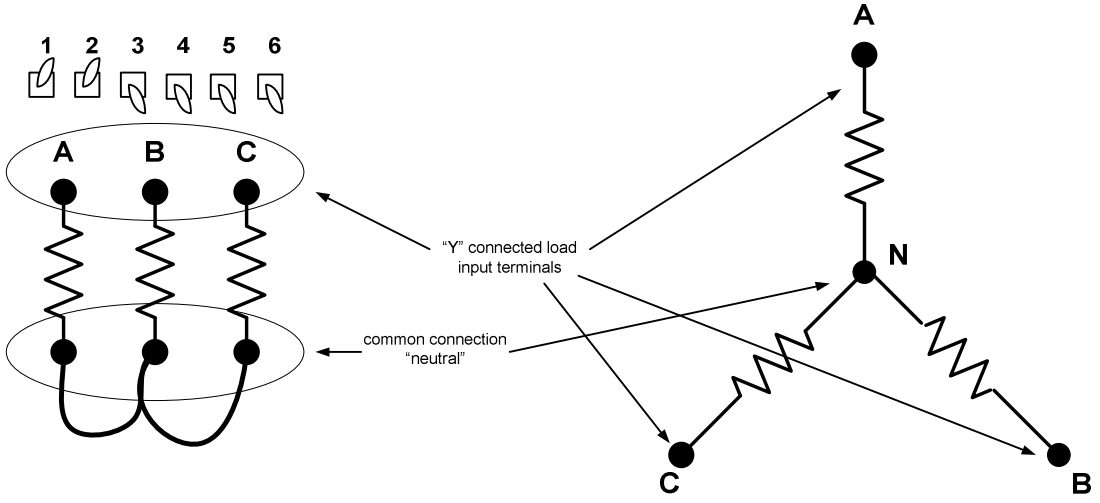


Figure 1

☐ Each toggle position adds a 2000 ohm resistor in parallel. Toggle up #1 and #2, and toggle down #3, #4, #5, and #6. This will create two 2000 ohm resistors in parallel on each branch.

**Step Two**: Connect the Wye circuit to a three-phase AC power source

☐ Locate the three-phase AC power source on your Hampden control panel.

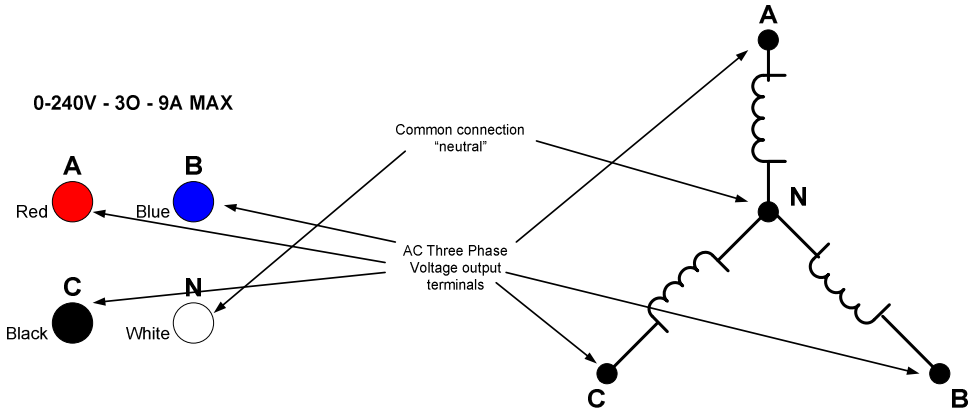


Figure 2

☐ Use Figure 3 as a guide and onnect the "A" phase to the "A" terminal on your load panel. Connect the "B" phase to the "B" terminal on your load panel. Connect the "C" phase to the "C" terminal on your load panel. Connect neutral terminals via DMM, so the DMM will measure the AC current (press and release SHIFT followed by the button below "AC I").

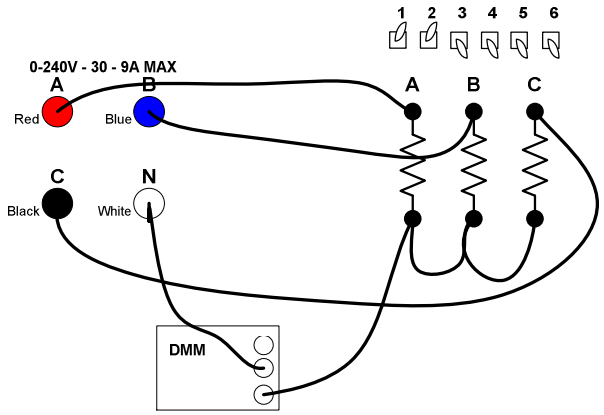


Figure 3

☐ Connect CH 1 of the oscilloscope, so that it measures the "A" phase voltage source. Connect CH 2 of the oscilloscope so that it measures the "B" phase voltage source (Figure 4).

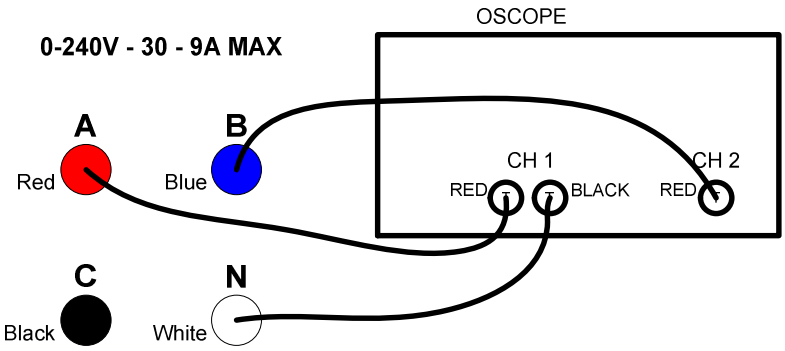


Figure 4

☐ Connect another DMM so that it measures the line voltage, $\mathbf{V_{ab}}$ (see Figure 5).

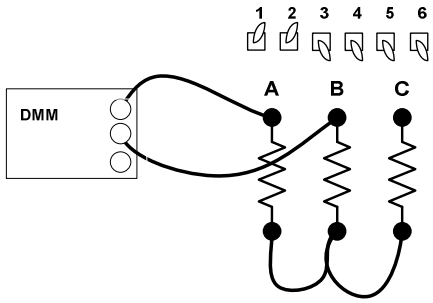


Figure 5

**Step Three**: Verify circuit and set power supply level.

***Warning: Follow the next steps very closely. If you provide too much voltage, you will damage the equipment.***

☐ Ensure that all voltage adjust knobs are adjusted to the full counter-clockwise position, their lowest setting, "0".

☐ Have an instructor verify your circuit, and then unlock the power supply.

☐ Turn on the MAIN AC power supply switch.

☐ Turn on the Variable Output Power supply switch.

☐ Very slightly rotate the VOLTAGE ADJUST power knob, so that it indicates half way between the "0" and "1" positions (see Figure 6).

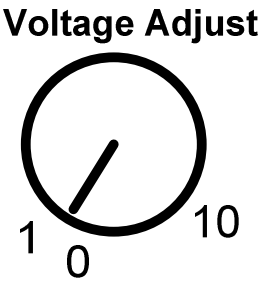


Figure 6

**Step Four**: Measurements

☐ Use your oscilloscope to determine the phasors $\mathbf{E_{AN}}$ and $\mathbf{E_{BN}}$.

$\mathbf{E_{AN}}$ = _____ $\mathbf{E_{BN}}$ = _____

☐ Use your DMM to determine the magnitude of the line current, $\mathbf{I_N}$.

$$\mathbf{I_N} = _____$$

☐ Use your DMM to determine the magnitude of the line voltage, $\mathbf{V_{ab}}$.

$$\mathbf{V_{ab}} = _____$$

**Step Five**: Analysis

☐ Determine if your measured line voltage $\mathbf{V_{ab}}$ is equal to $\mathbf{E_{AN} - E_{BN}}$, and /or equal to $\sqrt{3}\,\mathbf{E_{AN}}$.

$$\mathbf{E_{AN} - E_{BN}} = _____$$

$$\sqrt{3}\,\mathbf{E_{AN}} = _____$$

☐ Use Kirchhoff's Current Law to determine $\mathbf{I_C}$.

- Use Ohm's Law to determine $\mathbf{I_A}$ and $\mathbf{I_B}$

$$\mathbf{I_A} = _____$$

$$\mathbf{I_B} = _____$$

- Since $\mathbf{I_A + I_B + I_C = I_N}$, determine $\mathbf{I_C}$.

$$\mathbf{I_C} = _____$$

Are $\mathbf{I_A}$, $\mathbf{I_B}$, and $\mathbf{I_C}$ separated by 120 degrees? _____