PE 25

Transformers

(*Updated 30 Nov 2008*)

A Practical Exercise Name:_____ Section: _____

I. Purpose.

1. Introduce center-tapped transformers.
2. Introduce the transformation ratio (ratio of primary turns to secondary turns).

II. Equipment.

Agilent 34401A Digital Multimeter (DMM)
Oscilloscope
Function Generator
1500-Ω resistor
0.1-μF capacitor
Center-tapped transformer

III. Preparation.

Review Transformers and Coupled Circuits (*Circuit Analysis: Theory and Practice – Robbins/Miller, 2007*)

IV. Lab Procedure.

You must **read** and complete each step.

Step One: Determination of Transformer Turns Ratio Using Voltages

☐ Construct the circuit below (Figure 1) with the transformer that is provided, and set your function generator's output ($\mathbf{V_P}$) to a **5** $\mathbf{V_{RMS}}$ sine wave at **500 Hz**.

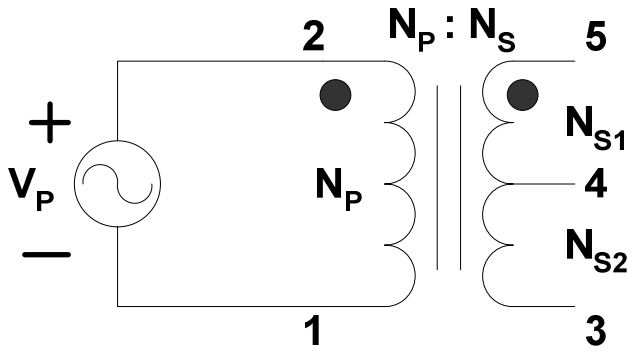

Figure 1

☐ Connect your oscilloscope to measure the voltage signal across the transformer outputs 5 - 3, and 4 - 3, and complete the table below.

V_P	V_{53}	V_{43}

☐ Using your measured voltages determine the following transformation ratio.

N_P:N_{53}=_____

N_P:N_{43}=_____

Since this is a center tapped transformer, what should be the transformation ratio **N_P:N_{54}**?

N_P:N_{54}=_____

If a load was added to the secondary side, would the current on the secondary side be larger or smaller than the current on the primary side? **Larger or smaller**

Step Two: Coupled circuit analysis.

☐ Construct the circuit below (Figure 2) and use your oscilloscope to measure **V_{53}** and **$V_{1500\Omega}$**.

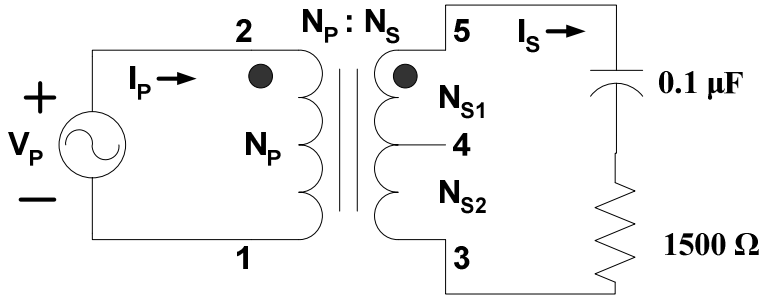

Figure 2

☐ Determine the current **I_S** (express your answer in polar form and consider **V_{53}** to be the reference phasor).

I_S =_____

☐ Using your calculated transformer ratio, determine **I_P**.

I_P =_____

Is this a Step-Up or Step-Down transformer? **Step-Up or Step-Down**