PE 3

Real Power and Kirchhoff's Voltage Law

Updated 24 May 2012

A Practical Exercise Name:_____ Section: _____

I. Purpose.

1. Review the correct use of the DMM for measuring voltage, current, and resistance.
2. Review the application of Ohm's Law in DC series circuits.
3. Introduce the application of Kirchhoff's Voltage Law in the analysis of a DC series circuit.
4. Introduce the calculation of power supplied and dissipated in a DC series circuit.

II. Equipment.

Agilent 34401A Digital Multi Meter (DMM)
Agilent E3620A Dual DC Power Supply
560-Ω, 220-Ω resistor

III. Pre-lab Calculations. Show all work.

Step One: Calculate total current.

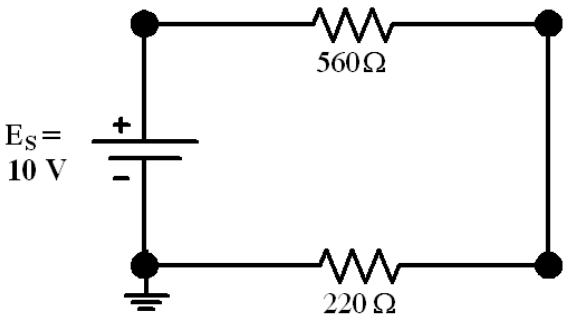

Figure 1

☐ Calculate the total resistance of the circuit R_{TOT}.

R_{TOT} = _____

☐ Use Ohm's Law to predict the total current in the circuit.

I_{TOT} = _____

☐ Indicate the direction of total current flow by drawing an arrow and labeling it on Figure 1.

Step Two: Predict DC voltage values using Ohm's Law.

☐ Use the predicted total current, the nominal value of the resistors, and Ohm's Law to predict the voltage drop across the 560 ohm and 220 ohm resistors.

$V_{560\Omega}$ = _____

$V_{220\Omega}$ = _____

☐ Indicate the polarity of the voltages across the 560-Ω resistor and the 220-Ω resistor on Figure 1.

Step Three: Instructor or lab assistant verification that pre-lab calculations are complete.

_____

IV. Lab Procedure. Time Required: 30 minutes. **Check-off each step as you complete it.**

Step One: DC Series Circuit:

☐ On a QUAD board construct the DC series circuit in Figure 1. Use the suggested layout of Figure 2 to allow easy measurement of current at various points in the circuit. The two "shorting bars" are placed in the circuit at the points where you will measure current (you could also use blue wires).

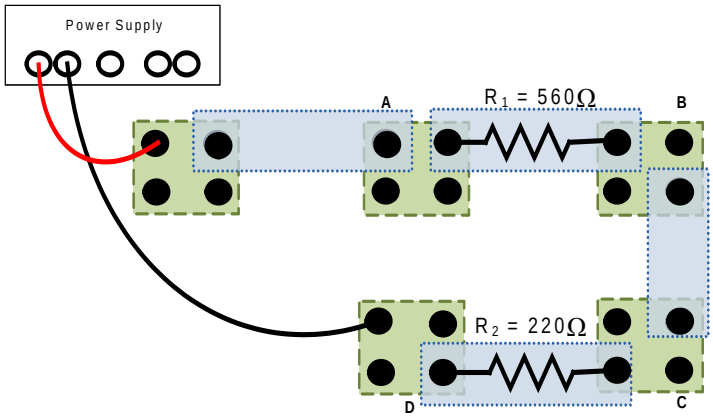

Figure 2

☐ Set the DC power supply to 10 volts. Verify the output of the power supply is accurate by measuring it with the left-hand DMM and adjusting the voltage as necessary.

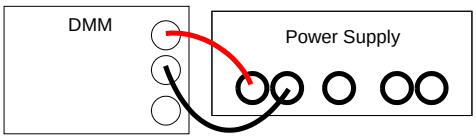

NOTE:
You should always use a DMM when adjusting the settings on the power supply. The DMM provides a more accurate reading then the power supply's meter.

DC Power Supply voltage (DMM measurement): _____

Step Two: Measure DC current. You will measure the DC current in two different places in the DC circuit. Remember the current that you wish to measure must pass through the DMM. To measure this current, you will "open" the circuit and insert the DMM. You cannot measure current by placing the DMM "across" components in the circuit.

☐ "Open" the circuit between the "+" side of the Dual DC power supply and the 560-Ω resistor by removing the "shorting bar".

☐ Setup the right hand DMM to measure current (refer to the lab bench reference card if needed), and connect it to measure the current through that opening, as seen in Figure 3.

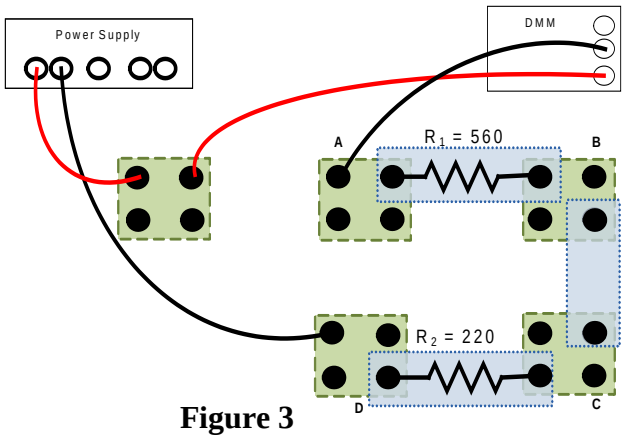

Figure 3

☐ Record the DC current between the "+" side of DC power supply and 560-Ω resistor.

I = _____

☐ Remove the right-hand DMM from the circuit and reinstall the shorting bar.

☐ "Open" the circuit between the 560-Ω resistor and the 220-Ω resistor by removing the "shorting bar".

☐ Connect the DMM to measure the DC current through that opening, as seen in Figure 4.

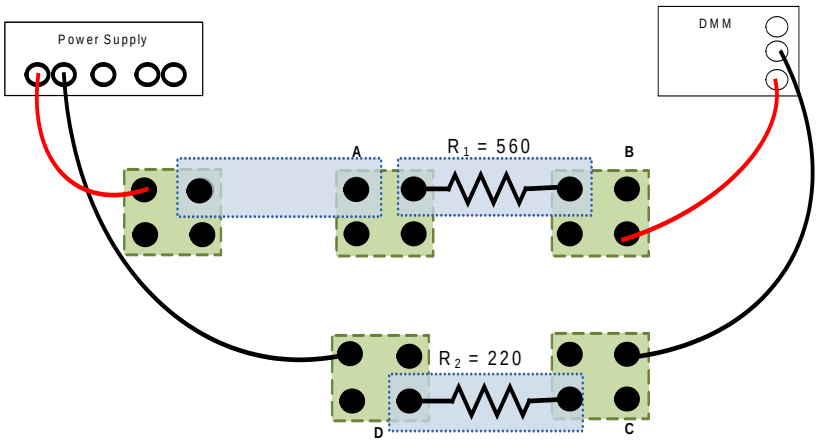

Figure 4

☐ Record the DC current between the 560-Ω resistor and the 220-Ω resistor.

I = _____

How closely do the measured current values match?

Exact_____ **Very close**_____ **Very Different**_____

Why? _____

_____

How closely do these measured current values match the predicted current value from part one of the pre-lab calculations? If it is more then 15% different, then you need to recheck your calculations or measurements.

Exact_____ **Very close**_____ **Very Different**_____

☐ Remove the DMM from the circuit and restore the circuit to the setup of Figure 1.

Step Three: Measure DC voltages. For this part we will measure the DC voltage of the power supply and the voltage drops across the 560 Ω and 220 Ω resistors. We will also measure the resistance of each resistor. Remember that the DMM leads are placed across the component(s) when measure the voltage drop across that component.

☐ Use the left-hand DMM to measure voltages.

☐ Measure the voltage drop across the 560-Ω and 220-Ω resistors. Ensure that you get proper polarity indication by putting the red lead on the "+" sign you indicated on Figure 1, and the black lead on the "-"sign.

$\mathbf{V_{560\Omega}}$ = _____

$\mathbf{V_{220\Omega}}$ = _____

How closely do the measured DC voltage values match the predicted DC values?

Exact_____ **Very close**_____ **Very Different**_____

What are possible causes for the differences between the measured and predicted values?

_____

_____

☐ Remove/isolate each resistor from the circuit and measure its resistance with the DMM.

$\mathbf{R_{560\Omega}}$ = _____

$\mathbf{R_{220\Omega}}$ = _____

Are these measured values of resistance within allowed tolerances?

Yes_____ **No**_____

Step Four: Verify Kirchhoff's Voltage Law.

☐ On Figure 5, label the DC voltage polarities and the measured DC voltage values of the DC voltage source, the 560-Ω resistor and the 220-Ω resistor.

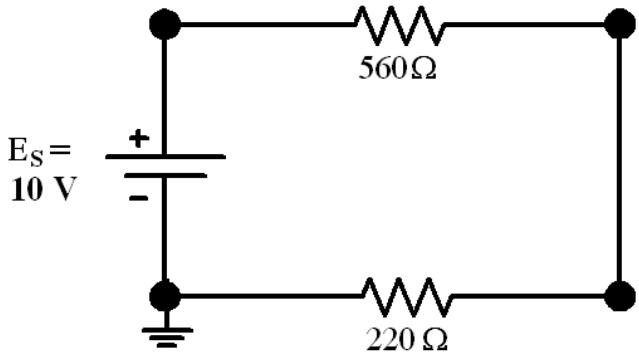

Figure 5

☐ Verify Kirchhoff's Voltage Law in this closed loop DC series circuit (calculation required).

$$\Sigma\, E_{gains} = \Sigma\, V_{drops}$$

Σ _____ = Σ_____=_____

How closely does the sum of the DC voltage gains match the sum of the DC voltage drops?

Exact_____ Very close_____ Very Different_____

What are possible causes for the differences?

_____

_____

Step Five: Compute the real power (**P = I V, P = I^2 R,** and **P = V^2 / R**).

☐ Using your measured current, voltage and resistor values, compute the power supplied by the DC power source and the power dissipated by the 560-Ω and the 220-Ω resistors.

$P_{IN} = E_S I =$

$P_{560\Omega} = I^2 R_{560\Omega} =$

$P_{220\Omega} = I^2 R_{220\Omega} =$

$P_{TOT} = P_{560\Omega} + P_{220\Omega} =$

P_{IN} = _____

$P_{560\Omega}$ = _____

$P_{220\Omega}$ = _____

How closely does the total power supplied match the sum of the power dissipated by the resistors?

Exact_____ **Very close**_____ **Very Different**_____

Explain any differences between Power supplied and the sum of the power dissipated by the resistors.

_____

_____