PE
5

Parallel Circuits and Kirchhoff's Current Law

Updated 25 May 2012

A Practical Exercise Name:_____ Section: _____

I. Purpose.

1. Review voltage subscript notation
2. Introduce the construction of a DC parallel circuit.
3. Introduce voltage across parallel elements.
4. Introduce the calculation of total resistance of resistive elements connected in parallel.
5. Introduce the application of Kirchhoff's Current Law in the analysis of a DC parallel circuit.

II. Equipment.

Agilent 34401A Digital Multimeter (DMM)
Agilent E3620A Dual DC Power Supply
560 Ohm, 1000 Ohm, 220 Ohm resistor

III. Pre-lab calculations. Show all work.

Step One: Determine total current I_{TOT} for the circuit of Figure 1.

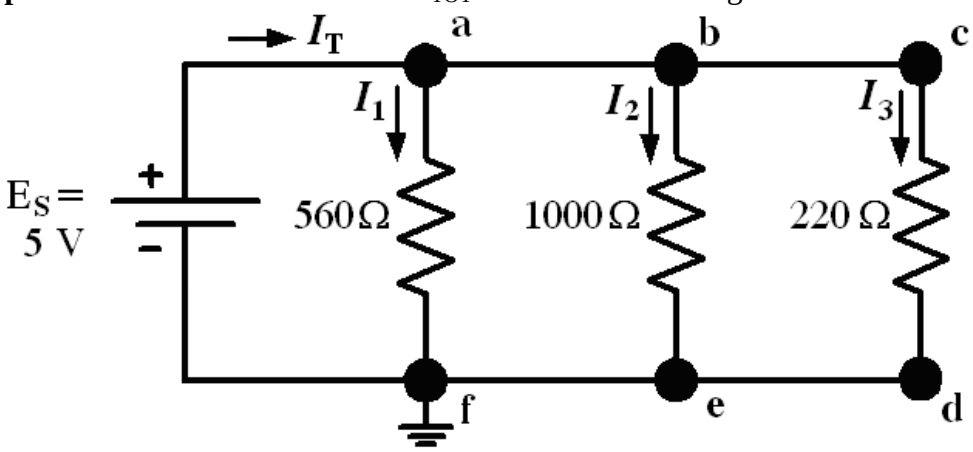

Figure 1

☐ Calculate the equivalent resistance, R_{EQ}, as seen by the source.

$R_{EQ(calculated)}$ = _____

☐ Calculate the total current I_T.

$I_{T(calculated)}$ = _____

Step Two: Branch Current Calculations

Use Ohm's Law to calculate the current down each branch.

$$I_x = \left(\frac{E_S}{R_x}\right)$$

$\boldsymbol{I_X}$ is the current through $\mathbf{R_X}$. Use nominal (expected) values of resistances.

$$I_1 = \left(\frac{E_S}{R_1}\right) = \left(\text{_____}\right) =$$ **I_1= _____**

$$I_2 = \left(\frac{E_S}{R_2}\right) = \left(\text{_____}\right) =$$ **I_2= _____**

$$I_3 = \left(\frac{E_S}{R_3}\right) = \left(\text{_____}\right) =$$ **I_3= _____**

Step Three: Verify Kirchhoff's Current Law (KCL).

Verify KCL by summing up the branch currents and comparing to the predicted total current from step one.

$$\sum I_{\text{entering node}} = \sum I_{\text{leaveing node}}$$

$$I_T = I_1 + I_2 + I_3$$

_____ = _____ + _____ + _____ = _____

How closely does the sum of currents entering the node match the sum leaving?

Exact_____ Very close_____ Very Different_____

Step Four: Instructor or lab assistant verification that pre-lab calculations are complete.

_____

IV. Lab Procedure. Time Required: 40 minutes. **Check-off each step as you complete it.**

Step One: Construct a DC parallel circuit.

☐ On a QUAD board construct the DC parallel circuit of figure 1. The suggested spacing of the layout below allows you to easily measure current through each parallel branch without rebuilding your circuit following each measurement.

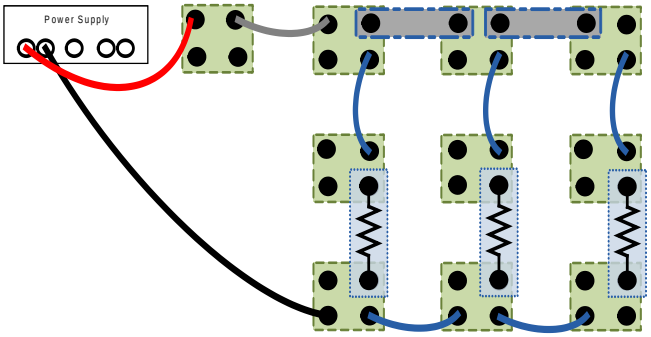

☐ Set the DC power supply to 5 volts. Verify the output of the power supply is accurate by measuring it with a DMM and adjusting the voltage as necessary.

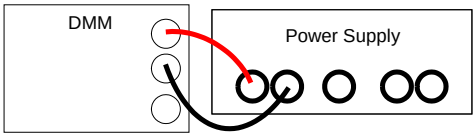

NOTE:
You should always use a DMM when adjusting the settings on the power supply. The DMM provides a more accurate reading then the power supply's meter.

Step Two: Verify voltages of parallel elements.

Elements or branches are said to be connected in parallel when they have exactly two nodes in common, and therefore voltages across all parallel elements in a circuit will be the same.

☐ Measure the voltage drop across the voltage source and across each parallel branch.

E_S= _____

V_{af}= _____

V_{be}= _____

V_{cd}= _____

How closely do all the measured voltages match?

Exact_____ **Very close**_____ **Very Different**_____

Why? _____

_____

Step Three: Measure total and branch currents. Verify Kirchhoff's Current Law.

☐ Measure the total current and the current through each branch.

Remember the current that you wish to measure must pass through the DMM. This means you must insert an "OPEN" in the circuit, and measure current with the DMM wired into that opening. Figure 2 shows the measurement of the I_3 current through the 220 ohm resistor.

CAUTION:
IF YOU GET A YELLOW OVERLOAD LIGHT ON THE POWER SUPPLY, IT MEANS THAT YOU HAVE SHORTED ACROSS THE POWER SUPPLY WITH THE DMM.

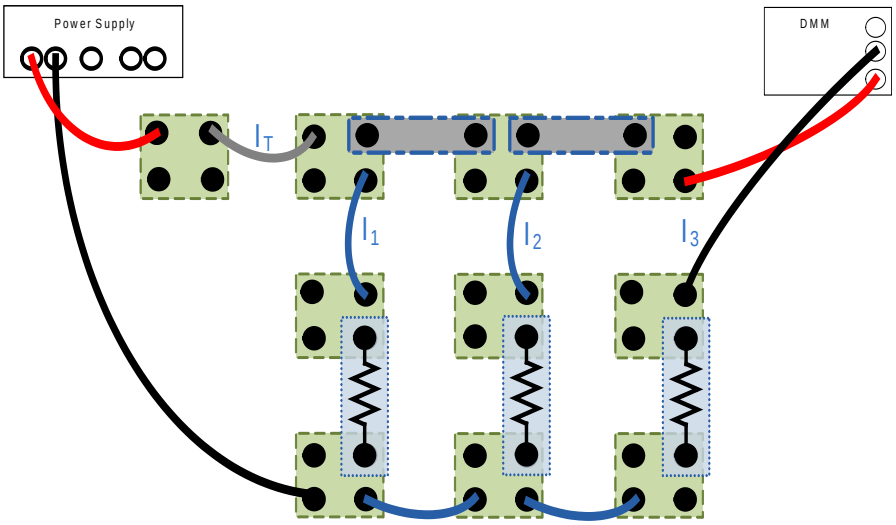

Figure 2

I_T= _____

I_1= _____

I_2= _____

I_3= _____

How closely do the measured branch currents match the predicted values from step two of the pre-lab calculations? If they are substantially different, then you need to check your measurements or calculations for errors, and seek assistance from your instructor.

Exact_____ **Very close**_____ **Very Different**_____

☐ Indicate on Figure 3 the direction of the DC currents in all branches and the polarity of the DC voltages across the voltage source and resistors.

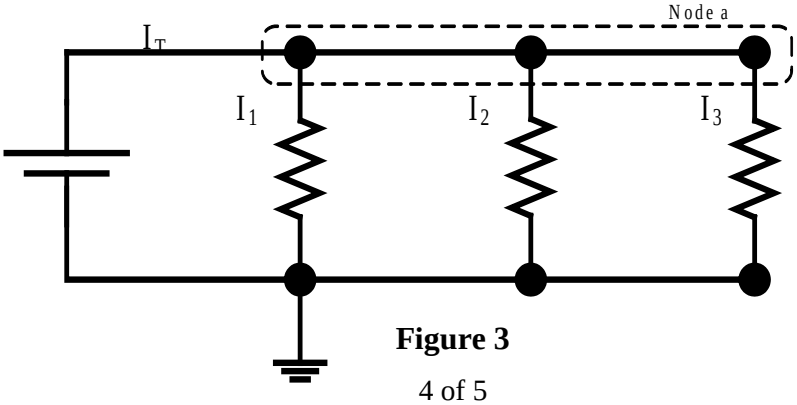

Figure 3

Kirchhoff's current law states that the summation of currents entering a node is equal to the summation of currents leaving that node.

☐ Verify Kirchhoff's Current Law for Node a in the above figure (calculations are required).

$$\sum I_{\text{entering node}} = \sum I_{\text{leaving node}}$$

$$I_T = I_1 + I_2 + I_3$$

_____ = _____ + _____ + _____ = _____

How closely does the sum of currents entering the node match the sum leaving?

Exact_____ **Very close**_____ **Very Different**_____

Step Four: Resistors in parallel.

☐ Measure the equivalent resistance $\boldsymbol{R_{EQ}}$, as seen by the source. Ensure that you disconnect the power supply before measuring the resistance.

$\boldsymbol{R_{EQ(measured)}}$ **=** _____

How closely does the measured equivalent resistance match the predicted value from step one of the pre-lab calculations?

Exact_____ **Very close**_____ **Very Different**_____

For this parallel circuit, how does the size of $\boldsymbol{R_{EQ}}$ compare with the sizes of the other resistors in the circuit?

Larger_____ **Smaller**_____ **Same**_____

From this practical exercise, what observation can we make about the relative values of resistance and the current flow through resistors? (Think of the phrase, "the path of least resistance".)

_____

_____

_____