HW # 8

7-2

a) $R_T = 4\Omega + \left[10\Omega \parallel (4\Omega + 4\Omega)\right] + 4\Omega = 12{,}44\,\Omega$

b) $R_T = 10\,\Omega + \left[10\,\Omega \parallel 10\,\Omega\right] = 15\,\Omega$

c) $R_T = (4\Omega \parallel 4\Omega) + 10\,\Omega = 12\,\Omega$

d) $R_T = 10\,\Omega$

7-5

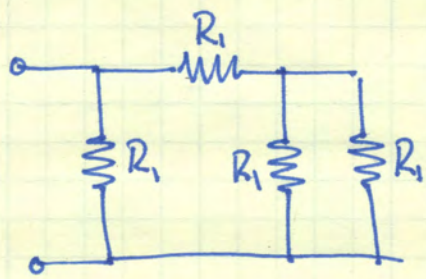

$R_T = 7{,}2\,k\Omega$

$$R_T = R_1 \parallel \left(R_1 + (R_1 \parallel R_1)\right) = R_1 \parallel \left(R_1 + \frac{R_1}{2}\right) = R_1 \parallel 1{,}5\,R_1$$

$$7{,}2\,k\Omega = \frac{R_1 \cdot 1{,}5\,R_1}{R_1 + 1{,}5\,R_1} = \frac{1{,}5\,R_1^{\cancel{2}}}{2{,}5\,\cancel{R_1}} = \frac{1{,}5\,R_1}{2{,}5} = 7{,}2\,k\Omega$$

$$R_1 = \frac{7{,}2\,k\Omega \cdot 2{,}5}{1{,}5} = \boxed{12\,k\Omega = R_1}$$

7-6

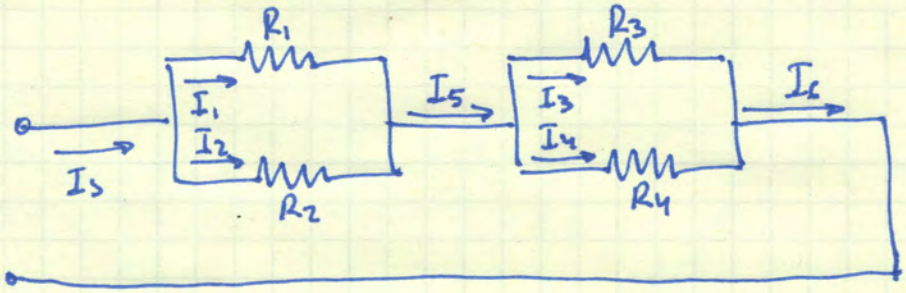

a.) $I_s = I_5 = I_6$

b.) $I_s = 10A$, $I_1 = 4A$ $\quad I_s = I_1 + I_2$ $\therefore$ $I_2 = I_s - I_1 = 10A - 4A = \boxed{6A = I_2}$

c.) $I_s = I_1 + I_2 = I_5 = I_3 + I_4 = I_6$

d.) $V_2 = 8V$, $E = 14V$. V_3?

$V_3 = E - V_2 = 14V - 8V = \boxed{6V = V_3}$

e.) $R_1 = 4\Omega$, $R_2 = 2\Omega$. $R_3 = 4\Omega$. $R_4 = 6\Omega$. R_T?

$R_T = (R_1 \| R_2) + (R_3 \| R_4) = (4\|2) + (4\|6) = \boxed{3.73\,\Omega = R_T}$

f.) If $R_1 = R_2 = R_3 = R_4 = 20\Omega$. I_s?

$R_T = (20\Omega \| 20\Omega) + (20\Omega \| 20\Omega) = 20\Omega$

$I_s = \frac{E}{R_T} = \frac{20V}{20\Omega} = \boxed{1A = I_s}$

g.) $P_s = E_s \cdot I_s = 20V \cdot 1A = 20\,W$

7-8

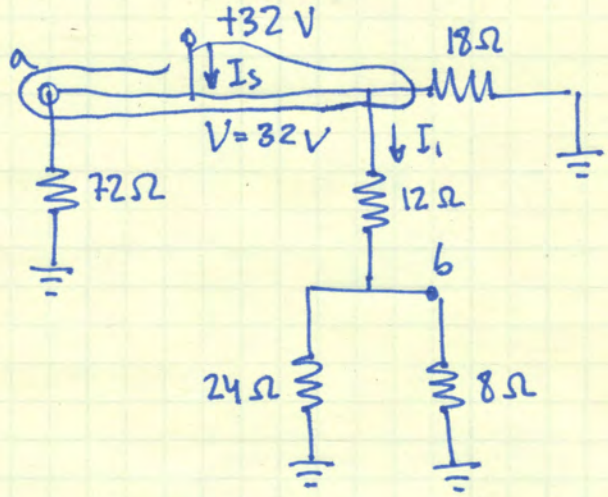

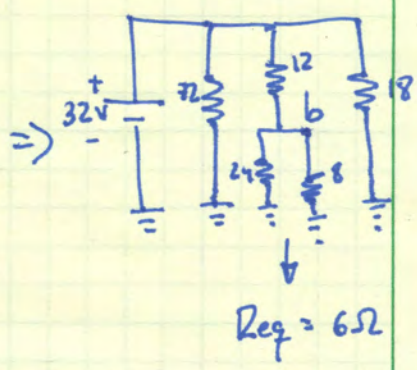

$V_a = 32V$

VDR → $V_b = 32V \cdot \frac{6\Omega}{6\Omega + 12\Omega} = 10.67V$

$I_1 = \frac{V}{R} = \frac{32V}{12\Omega + 6\Omega} = \boxed{1.78A = I_1}$

$R_T = 72\Omega \| 18\Omega \| 18\Omega = \boxed{8.00\,\Omega = R_T}$

$I_s = \frac{E}{R_T} = \frac{32V}{8.00\,\Omega} = \boxed{4.00\,A = I_s}$

7-12

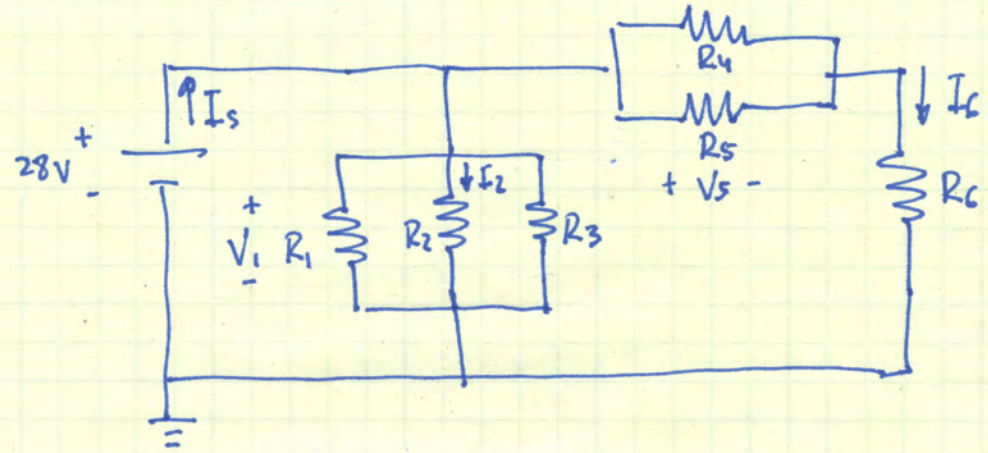

a. I_s, I_2, I_6

$$R_T = \left[(R_1 \| R_2 \| R_3) \| (R_6 + (R_4 \| R_5))\right] = (12 \| 12 \| 3) \| (10{,}4 + (9 \| 6)) =$$

$$\boxed{R_T = 1{,}75\ k\Omega} = R_{eq} \qquad I_s = \frac{E}{R_T} = \frac{28\ V}{1{,}75\ k\Omega} = \boxed{16\ mA = I_s}$$

$$I_2 = \frac{E}{R_2} = \frac{28\ V}{12\ k\Omega} = \boxed{2{,}33\ mA = I_2}$$

$$I_6 = I_T \cdot \frac{R_{eq}}{R_x} = 16\ mA \cdot \frac{1{,}75\ k\Omega}{14\ k\Omega} = \boxed{2\ mA = I_6}$$

$R_x \rightarrow R_6 + (R_4 \| R_5)$

b. $V_1 = E = 28\ V$

$$V_5 = I_6 \cdot R_{eq} = I_6 \cdot (R_4 \| R_5) = 2\ mA \cdot 3{,}6\ k\Omega = \boxed{7{,}2\ V = V_5}$$

c. $$P = \frac{V^2}{R_3} = \frac{(28\ V)^2}{3\ k\Omega} = \boxed{261{,}3\ mW = P}$$