EE301 HW#10
Nodal Analysis

KEY

1. Given the following circuit:

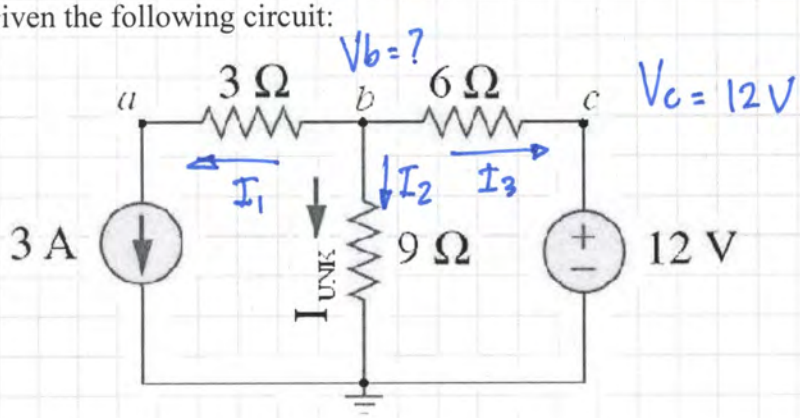

a. Write the equations for the three branch currents at node b. DRAW the current arrows corresponding to these equations on the circuit above.

$I_1 =$ 3A

$I_2 = \frac{V_b}{9}$

$I_3 = \frac{V_b - V_c}{6} = \frac{V_b - 12}{6}$

b. Write the resulting Nodal Analysis equation for node b and solve for the unknown voltage V_b. Calculate I_{UNK}.

$\sum I_{in} = \sum I_{OUT}$

$\emptyset = I_1 + I_2 + I_3$

$I_1 = 3A$

$I_2 = \frac{V_b - \emptyset}{9}$

$I_3 = \frac{V_b - 12}{6}$

$\emptyset = 3 + \frac{V_b}{9} + \frac{V_b - 12}{6}$

$\emptyset = 54 + 2V_b + 3V_b - 36$

$\emptyset = 18 + 5V_b$

$V_b = -\frac{18}{5} = -3{,}6\ V$

$I_{UNK} = I_2 = \frac{V_b}{9} = \frac{-3{,}6}{9} = -0{,}4\ A$

$V_b =$ -3,6 V

$I_{UNK} =$ -0,4 A

EE301 HW#10
Nodal Analysis

2. Given the following circuit:

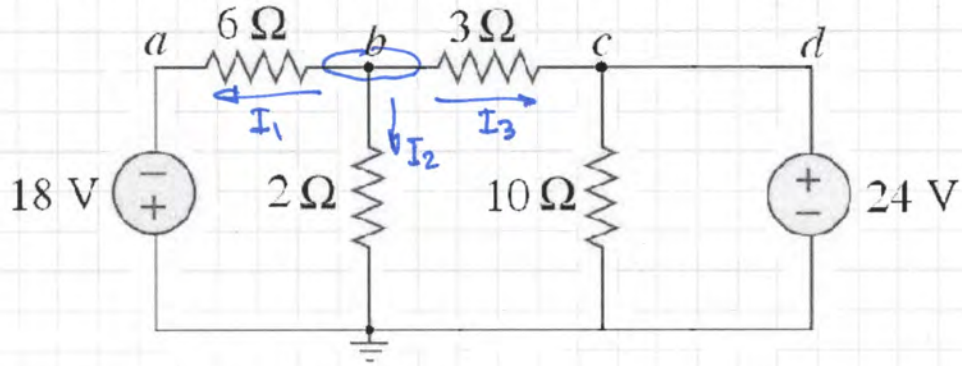

a. Identify the voltage at each of the lettered points above (either as a value or as UNKNOWN if it must be calculated)

V_a = -18 V

V_b = UNKNOWN

V_c = 24 V

V_d = 24 V

b. Write the equations for the three branch currents at node b. DRAW the current arrows corresponding to these equations on the circuit above.

$I_1 = \frac{V_b - (-18V)}{6} = \frac{V_b + 18}{6}$

$I_2 = \frac{V_b - 0}{2} = \frac{V_b}{2}$

$I_3 = \frac{V_b - 24V}{3}$

c. Write the resulting Nodal Analysis equation and solve for the unknown voltages.

$\Sigma I_{in} = \Sigma I_{out}$

$\phi = I_1 + I_2 + I_3$

$\phi = \frac{V_b + 18}{6} + \frac{V_b}{2} + \frac{V_b - 24}{3}$

$\phi = V_b + 18 + 3V_b + 2V_b - 48$

$\phi = 6V_b - 30$

$V_b = \frac{30}{6} = 5\ V$

$\boxed{V_b = 5\ V}$

EE301 HW#10
Nodal Analysis

3. Given the following circuit:

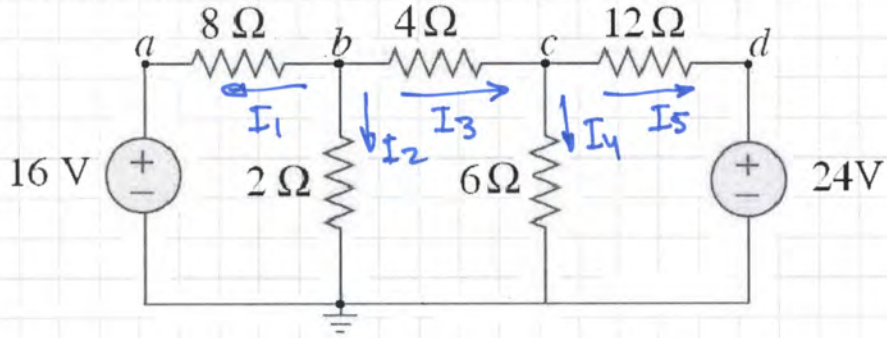

c. Identify the voltage at each of the four nodes (either as a value or as UNKNOWN if it must be calculated)

V_a = 16 V

V_b = UNKNOWN

V_c = UNKNOWN

V_d = 24 V

d. Write the nodal analysis equation for nodes b and c. $\sum I_{in} = \sum I_{out}$

Node b: $0 = I_1 + I_2 + I_3 = \frac{V_b - 16}{8} + \frac{V_b}{2} + \frac{V_b - V_c}{4} = 0$

Node c: $I_3 = I_4 + I_5 = \frac{V_b - V_c}{4} = \frac{V_c}{6} + \frac{V_c - 24}{12}$

e. Solve for the unknown node voltages.

$V_b - 16 + 4V_b + 2V_b - 2V_c = 0$ " $7V_b - 16 = 2V_c$ " $V_b = \frac{2V_c + 16}{7}$

$3V_b - 3V_c = 2V_c + V_c - 24$ " $3V_b = 6V_c - 24$ " $V_b = 2V_c - 8$

$\frac{2V_c + 16}{7} = 2V_c - 8$ " $2V_c + 16 = 14V_c - 56$

$12V_c = 72$

$V_c = \frac{72}{12} = \boxed{6\text{ V} = V_c}$

$V_b = \frac{2 \cdot 6 + 16}{7} = \boxed{4\text{ V} = V_b}$

EE301 HW#10
Nodal Analysis

4. Use Nodal Analysis to determine the currents I_X and I_Y in the circuit below.

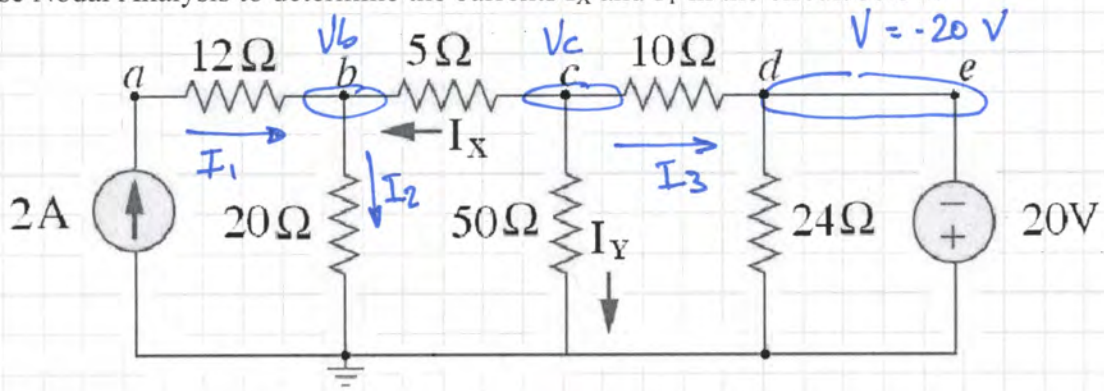

Node b

$I_1 = 2A$

$\sum I_{in} = \sum I_{out}$

$I_1 + I_X = I_2$

$2 + \frac{V_c - V_b}{5} = \frac{V_b}{20}$

$40 + 4V_c - 4V_b = V_b$, $5V_b = 40 + 4V_c$

$V_b = \frac{40 + 4V_c}{5}$

Node c

$\sum I_{in} = \sum I_{out}$

$\emptyset = I_X + I_Y + I_3$

$\emptyset = \frac{V_c - V_b}{5} + \frac{V_c}{50} + \frac{V_c + 20}{10}$

$\emptyset = 10V_c - 10V_b + V_c + 5V_c + 100$, $\emptyset = 16V_c - 10V_b + 100$

$\emptyset = 16V_c - \frac{400 + 40V_c}{5} + 100$

$\emptyset = 16V_c - (80 + 8V_c) + 100 = 16V_c - 80 - 8V_c + 100 = 8V_c + 20$

$V_c = \frac{-20}{8} = -2{,}5\ V$

$V_b = \frac{40 - 10}{5} = \frac{30}{5} = 6V$

$I_X = \frac{V_c - V_b}{5} = \frac{-2{,}5 - 6}{5} = 1{,}7A \rightarrow$

$I_Y = \frac{V_c}{50} = \frac{-2{,}5}{50} = 50\ mA \uparrow$