BINARY WEIGHTED DAC

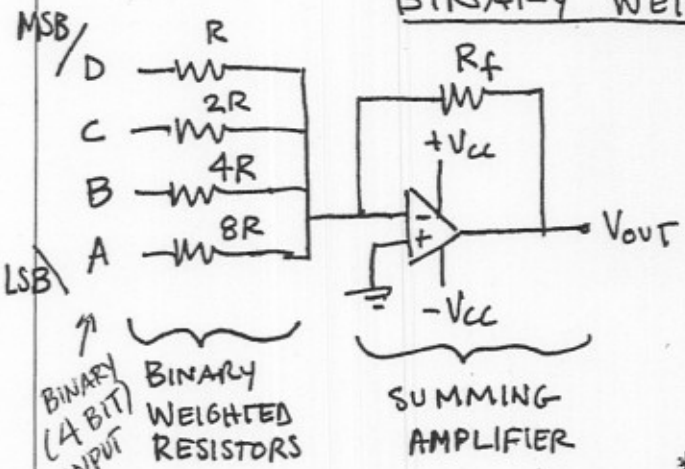

KCL: $\underbrace{\frac{V_D}{R} + \frac{V_C}{2R} + \frac{V_B}{4R} + \frac{V_A}{8R} + \frac{V_{OUT}}{R_f}}_{} = 0$

$$\boxed{V_{OUT} = -R_f\left(\frac{V_D}{R} + \frac{V_C}{2R} + \frac{V_B}{4R} + \frac{V_A}{8R}\right)}$$

* VOLTAGES AT D, C, B, A CAN BE EITHER 0V (0) OR 5V (1) ONLY! [DIGITAL INPUTS]

(LOGIC HI VOLTAGE MAY BE OTHER THAN 5V)

($R = R_f$)

DIGITAL INPUTS

D	C	B	A	V_{OUT}
0	0	0	0	0V
0	0	0	1	-6.25mV
0	0	1	0	-1.25V
0	0	1	1	-1.875V
0	1	0	0	-2.5V
0	1	0	1	-3.125V
0	1	1	0	-3.75V
0	1	1	1	-4.375V
1	0	0	0	-5.0V
1	0	0	1	-5.625V
1	0	1	0	-6.25V
1	0	1	1	-6.875
1	1	0	0	-7.5V
1	1	0	1	-8.125V
1	1	1	0	-8.75V
1	1	1	1	-9.375V

WHAT IF INSTEAD $R = 5k\Omega$ AND $R_f = 8k\Omega$?

$V_{OUT} =$ 0V, -1V, -2V, -3V, -4V, ⋮, -15V

- R_f USED TO SCALE THE OUTPUT.
- SHAPE OF V_{OUT} WILL BE THE SAME REGARDLESS

ASSUMES 1 = 5V
0 = 0V

$+V_{cc} = 5V$

$-V_{cc} = -5V$

$R = R_f = 1k\Omega$

SHORTCUT: $\boxed{V_{OUT} = \left(\frac{V_{FS}}{2^N - 1}\right) * \text{DEC. VALUE}}$

EG.

FOR $R = R_f$ $\quad V_{OUT} = \frac{-9.375V}{15}(3) = -1.875V$ ✓

FOR $R = 5k$, $R_f = 8k$ $\quad V_{OUT} = \frac{-15V}{15}(3) = -3V$ ✓

☆ BEWARE: • THIS IS EASY!
• WATCH OUT FOR RESISTOR VALUES!!

OBTW

WEIGHT OF LSB (WHEN DIGITAL IN = 0001): $V_{OUT} = -R_f\left(\frac{0}{R} + \frac{0}{2R} + \frac{0}{4R} + \frac{5}{8R}\right)$