Learning digital logic can be difficult using just chalkboards. Sometimes a little hands-on training can bridge the gap between learning and understanding. For our Labs, we will be designing digital logic circuits using the **Altera Development Board** with **Quartus II Software**.

Altera Development Board

The Altera Development Board contains a Programmable Logic Device (PLD) which is a chip that can be programmed to perform a wide variety of logical operations (AND, OR, NOT, NAND, etc) in any combination. The PLD provided on our development board can be programmed to represent over sixty eight thousand logic gates. A typical 74xx series Integrated Circuit (IC) chips typically contain up to 4 logic gates. We would need about 17,000 ICs to match the PLD's capabilities. Imagine trying to wire together 17,000 different ICs.

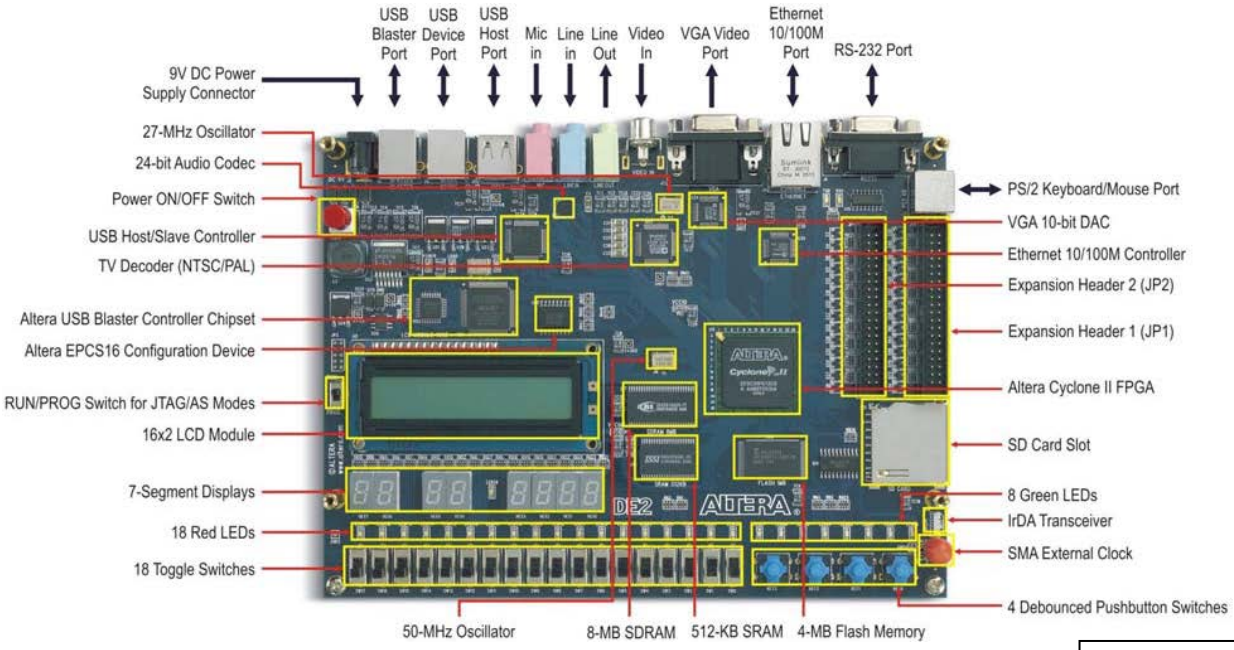

Figure A. Altera DE2 Development Board

Quartus II Software

The Quartus II software provides the means in which we can program the PLD with our circuit design. The software facilitates a process in which we create our design, verify our design is correct, and then implement our design with the PLD. The basic design flow is shown in Figure B. This software allows you to build digital logic circuits with pictures or a language called VHDL. Next a user will have the software compile the design. When you compile your design, the program determines how to configure the PLD so that it functions just as you've designed. Once your circuit has compiled with no errors, you can then simulate it and the program will display an output for your circuit. This will allow you to see if the circuit is doing what you thought it would. After simulation, you will connect your logic to the outside world. This is done by assigning pins to the inputs and outputs of your circuit and re-compiling. Finally, you program the PLD by sending the compiled design to the PLD. Once that is complete, the PLD should operate as designed and is ready for final testing.

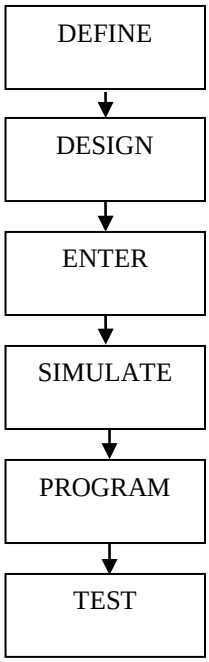

Figure B. Design Flow

Setting up a New Project

1. Setup a new project in Altera Quartus II.
    a. Select **File → New Project Wizard**
    b. If the New Project Wizard:Introduction Dialog appears, Click **Next**
    c. Enter the directory name and project name as indicated below. Do not include spaces or symbols in the file name. *Every name can have a maximum of 8 characters with no symbols other than underscores allowed.*

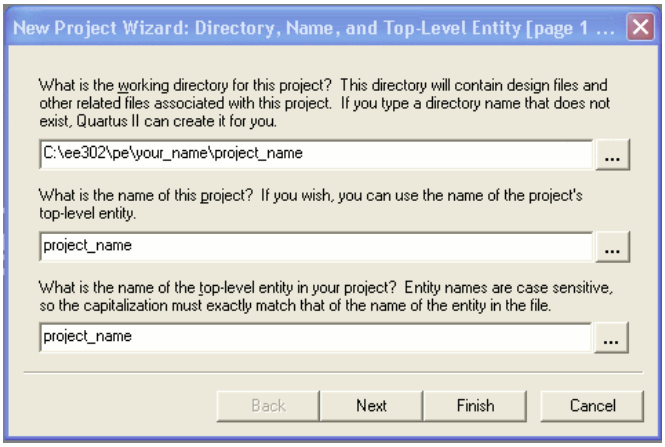

Figure 1

    d. Click **Next**. If the directory does not already exist, a dialog will ask to create it. Click **Yes**.
    e. Click **Next** 1 more times.
    f. Select Family **Cyclone II** as shown in Figure 2.
    g. Select **EP2C35F672C6** in the Available Devices list box, and click Finish.
    **** NOTE: Verify the Device Family and Name with the actual chip on the DE2 Board ****

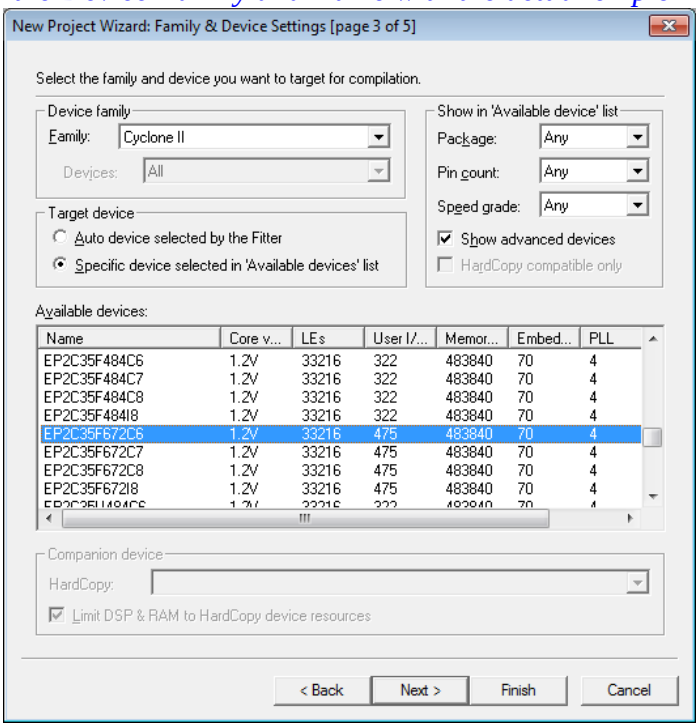

Figure 2

I. Drawing a block diagram.

1. Adding your new Device Schematic to the Project
   h. Select **File → New**
   i. Select **Block Diagram/Schematic File**
   j. Click the **OK** button.

2. Draw the schematic.
   a. Double click the area where you want a new item.
   b. Select the item you want from the Libraries List Box. To expand or contract the list click on the plus or minus sign respectively. Note that most items you need will be in the *primatives/logic* or *primatives/pin* folder. Alternatively, you may type the name of the item you want in the **Name Box** from Table 1.

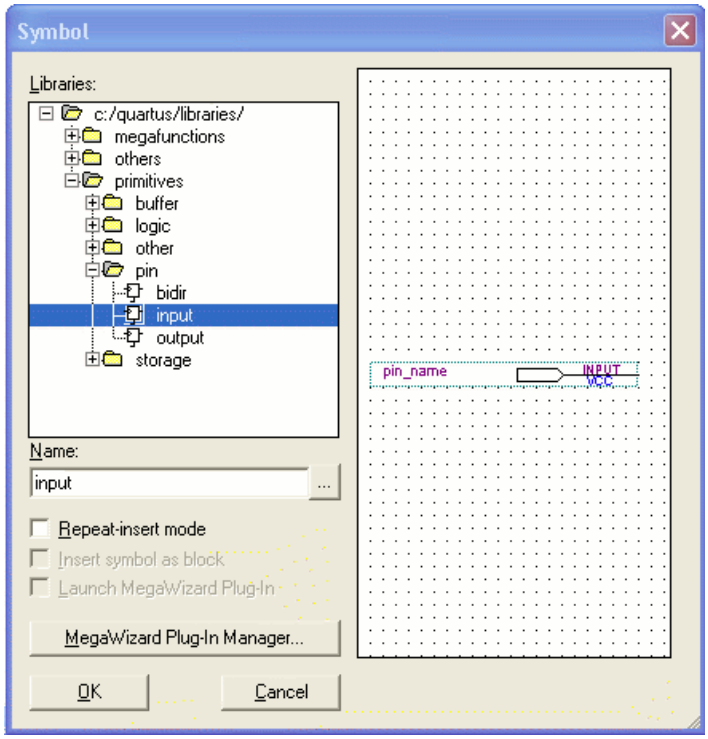

Figure 3

Device/Gate	Text Entry
Input	`input`
Output	`output`
2 Input AND	`and2`
3 Input AND	`and3`
2 Input OR	`or2`
Inverter	`not`
XOR	`xor`
2 Input NOR	`nor2`
JK FlipFlop	`jkff`
D FlipFlop	`dff`
T Flip Flop	`tff`
Freq Divider	`freqdiv`
Nor Latch	`norltch`
Ground (low)	`gnd`
Vcc (high)	`vcc`

Table 1

   c. Click **OK.**
   d. Place the object in the desired location on the schematic and click the **Left Button**.
   e. Give each input and output a unique name by editing the pin name. You can edit the pin name by **Single** or **Double Left Clicking** on top of the name.
   f. Connect the devices using the orthogonal node tool to implement the circuit. (Note: this is much easier to do if you take each input and tie it a vertical rail as shown below in Figure 4).
   g. Save the file using **File → Save As**. *The filename must have no spaces.*

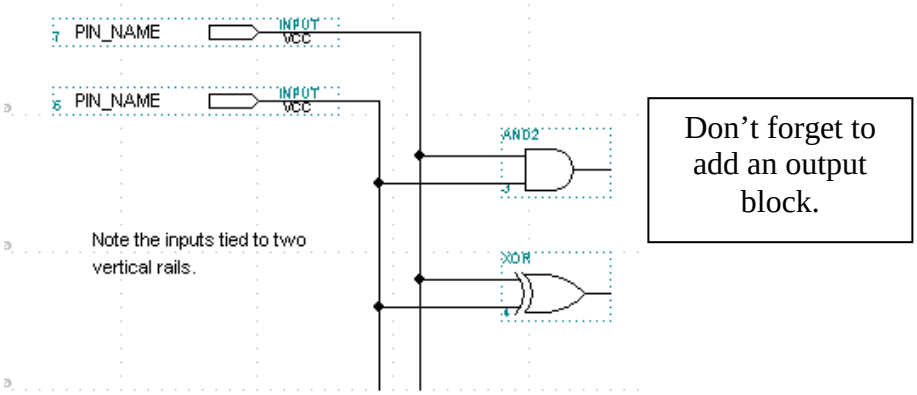

Figure 4

3. Save the project.
    a. Select **File → Save Project**.
4. Compile the Project
    a. Press **Ctrl+L** or Select **Processing → Start Compilation**
    b. If all went well, I dialog box will indicate compilation complete. Otherwise, the compiler report should indicate what the errors were.

II. Simulating the project with the waveform editor.

1. Ensure all changes to the logic have been saved and compiled!
2. Simulate the project.
   c. Select **Processing → Simulator Tool**.
   d. If a warning dialog comes up, click **OK**.
   e. Set the *Simulator Mode* to **Timing** as in Figure 5b.
   f. Click the **Open** Button.
   g. Select **Edit → Insert Node or Bus**.
   h. Click the **Node Finder** Button.
   i. Click on **Filter → Pins: all**.
   j. Click the **List** Button.
   k. Click the >> Button.
   l. Click **OK** Button.
   m. Click **OK** Button.
   n. Highlight all the Inputs per Figure 5a.

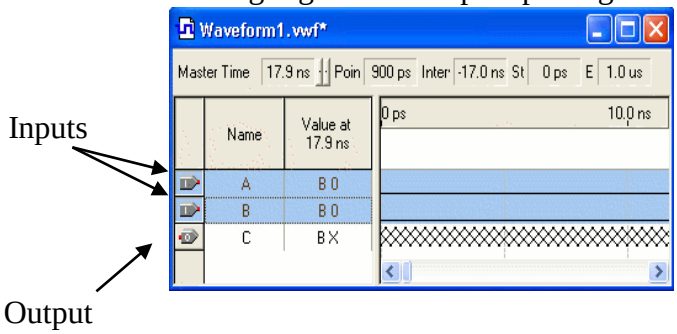

Figure 5a

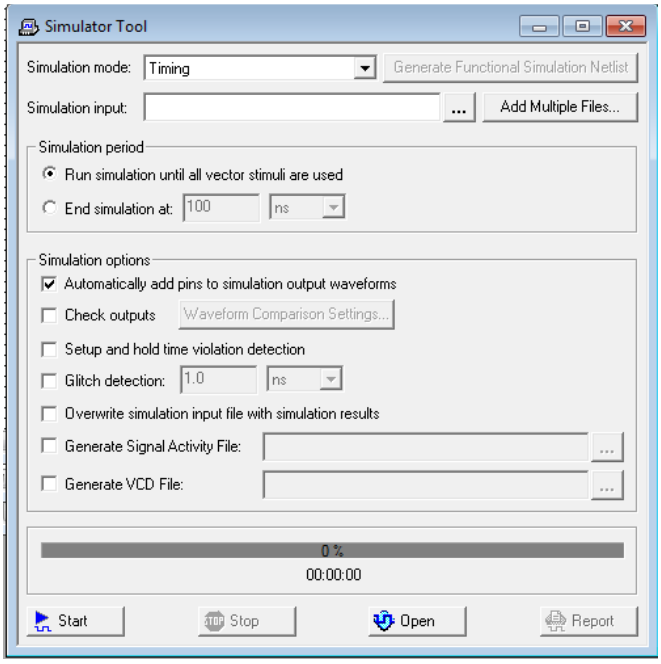

Figure 5b

   o. Select **Edit → Grouping →Group**.
   p. Enter **Inputs** for the *Group Name*.
   q. Click **OK**.
   r. Select the **Inputs** on the Waveform window.
   s. Click the **Count** Button.
   t. Click **OK**.
   u. Select **File → Close**.
   v. When asked to Save Changes, Click the **Yes** Button.
   w. Note the filename of the Vector Waveform File then Click the **Save** button. .
   x. Click the **Start** Button on the Simulator Tool.
   y. Click **OK**.
   z. Click the **Report** Button on the Simulator Tool. If there were no simulation errors, the Input and Output waveforms should be displayed.

III. Pin Assignments

Pins can be assigned either by entering the location for named Inputs and Outputs or by importing the DE2 Board Pinout file and using standard naming nomenclature for inputs and outputs.

Method 1 – Customized Input Output Naming.

1. Assign Pins to Inputs and Outputs
    a. Select **Assignments → Assignment Editor**.

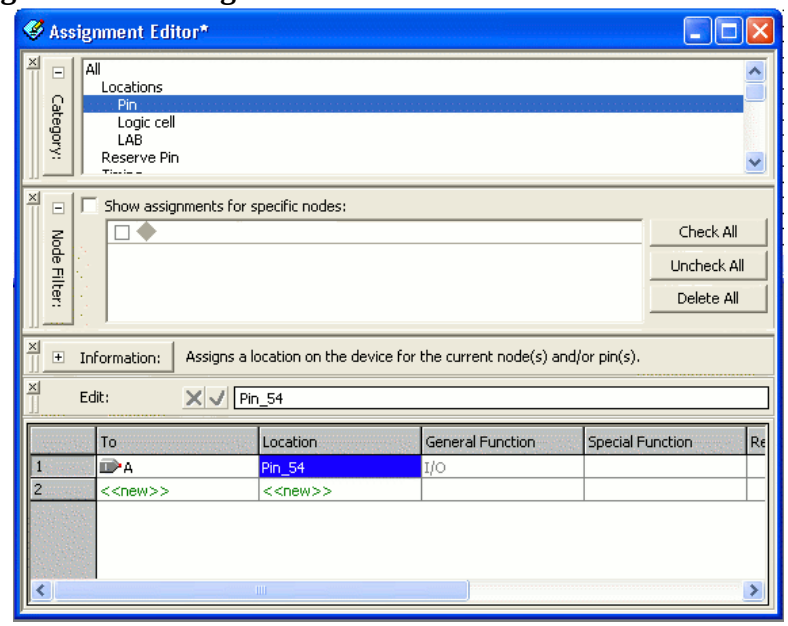

Figure 6

    b. Select the **Pin** *Category* in the Assignment Editor per Figure 7.

Important Note: Write down the pin numbers assigned in the next step!

    c. Perform the following 4 steps for each Input and Output.
        i. Double Click **<<new>>** in the *To* Column
        ii. Select the desired Input or Output
        iii. Double Click **<<new>>** in the *Location* Column
        iv. Select the desired pin number. *Pin numbers are listed in Table 2.*
    d. When complete select **File → Close**.
    e. Click the **Yes** Button.
2. Re-Compile the project.

Method 2 – Standard Naming Nomenclature

1. Download the DE2 Pinout QSF File from the course web page.
2. Click **Assignments->Import Assignments**
3. Click …
4. Select the downloaded pin assignment file *DE2.qsf*.
5. Click the **Open** button.
6. Click the **OK** button.
7. Name Inputs and Outputs in your design using the Signal Name from Table 2.

Toggle Switches

Signal Name	FPGA Pin No.
SW[0]	PIN_N25
SW[1]	PIN_N26
SW[2]	PIN_P25
SW[3]	PIN_AE14
SW[4]	PIN_AF14
SW[5]	PIN_AD13
SW[6]	PIN_AC13
SW[7]	PIN_C13
SW[8]	PIN_B13
SW[9]	PIN_A13
SW[10]	PIN_N1
SW[11]	PIN_P1
SW[12]	PIN_P2
SW[13]	PIN_T7
SW[14]	PIN_U3
SW[15]	PIN_U4
SW[16]	PIN_V1
SW[17]	PIN_V2

Pushbuttons

Signal Name	FPGA Pin No.
KEY[0]	PIN_G26
KEY[1]	PIN_N23
KEY[2]	PIN_P23
KEY[3]	PIN_W26

Red and Green LEDs

Signal Name	FPGA Pin No.
LEDR[0]	PIN_AE23
LEDR[1]	PIN_AF23
LEDR[2]	PIN_AB21
LEDR[3]	PIN_AC22
LEDR[4]	PIN_AD22
LEDR[5]	PIN_AD23
LEDR[6]	PIN_AD21
LEDR[7]	PIN_AC21
LEDR[8]	PIN_AA14
LEDR[9]	PIN_Y13
LEDR[10]	PIN_AA13
LEDR[11]	PIN_AC14
LEDR[12]	PIN_AD15
LEDR[13]	PIN_AE15
LEDR[14]	PIN_AF13
LEDR[15]	PIN_AE13
LEDR[16]	PIN_AE12
LEDR[17]	PIN_AD12
LEDG[0]	PIN_AE22
LEDG[1]	PIN_AF22
LEDG[2]	PIN_W19
LEDG[3]	PIN_V18
LEDG[4]	PIN_U18
LEDG[5]	PIN_U17
LEDG[6]	PIN_AA20
LEDG[7]	PIN_Y18
LEDG[8]	PIN_Y12

7 Segment Displays 0-4

Signal Name	FPGA Pin No.
HEX0[0]	PIN_AF10
HEX0[1]	PIN_AB12
HEX0[2]	PIN_AC12
HEX0[3]	PIN_AD11
HEX0[4]	PIN_AE11
HEX0[5]	PIN_V14
HEX0[6]	PIN_V13
HEX1[0]	PIN_V20
HEX1[1]	PIN_V21
HEX1[2]	PIN_W21
HEX1[3]	PIN_Y22
HEX1[4]	PIN_AA24
HEX1[5]	PIN_AA23
HEX1[6]	PIN_AB24
HEX2[0]	PIN_AB23
HEX2[1]	PIN_V22
HEX2[2]	PIN_AC25
HEX2[3]	PIN_AC26
HEX2[4]	PIN_AB26
HEX2[5]	PIN_AB25
HEX2[6]	PIN_Y24
HEX3[0]	PIN_Y23
HEX3[1]	PIN_AA25
HEX3[2]	PIN_AA26
HEX3[3]	PIN_Y26
HEX3[4]	PIN_Y25
HEX3[5]	PIN_U22
HEX3[6]	PIN_W24
HEX4[0]	PIN_U9
HEX4[1]	PIN_U1
HEX4[2]	PIN_U2
HEX4[3]	PIN_T4
HEX4[4]	PIN_R7
HEX4[5]	PIN_R6
HEX4[6]	PIN_T3

Clock Signals

Signal Name	FPGA Pin No.	Description
CLOCK_27	PIN_D13	27 MHz clock input
CLOCK_50	PIN_N2	50 MHz clock input
EXT_CLOCK	PIN_P26	External (SMA) clock input

Table 2 – See the DE2 Users Manual for a Complete Listing

IV. Programing the Altera Board.

1. Verify the RUN/PROG switch is in Run.

2. Implement the design on the Altera board.
   a. Connect the power and USB cables to the Altera board. The USB Cable should be connected to the USB Blaster Port.
   b. Turn on the power to the Altera board.
   c. Select **Tools → Programmer.**
   d. Verify the **Program/Configure** Check Box is Checked.
   e. Verify USB Blaster is displayed next to Hardware Setup. *If the USB Blaster is not displayed.*
      i. Verify your USB Cable and power supply cable are properly connected.
      ii. Click the **Hardware Setup** Button.
      iii. Select *USB Blaster* from the Currently selected Hardware dropdown menu.
      iv. Click the **Close** Button.
   f. Click the **Start** button.

V. Creating a Symbol File

1. Symbol Files allows a user to create a specialized symbol.
2. To create a symbol, complete the following steps.
   a. Select **File → New**
   b. Select **Block Diagram/Schematic File**
   c. Click the **OK** button.
   d. Draw your logic circuit diagram.
   e. **Save** your file with the desired name of the symbol.
   f. **Compile** your file.
   g. Select the entire contents of your logic circuit diagram file (or type CTRL+A).
   h. Select **File → Create/Update →Create Symbol Files for Current File**
   i. Click **Save**
   j. Read the Dialog and Click **OK**.
   k. Now the symbol has been created.

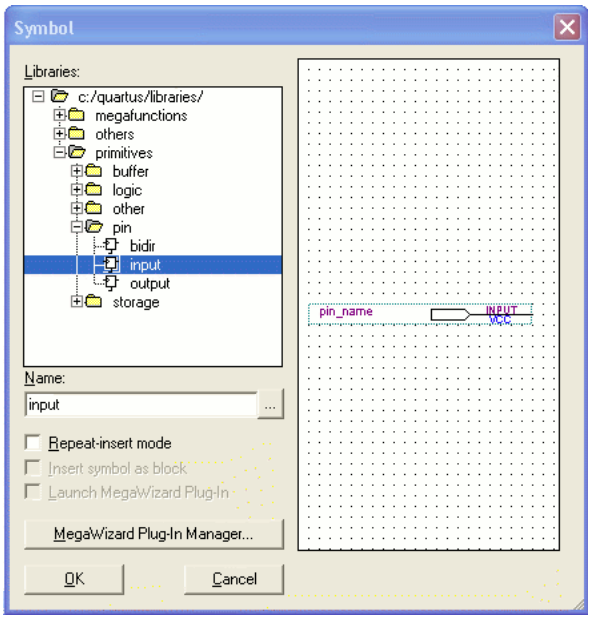

Figure 7

3. To insert your symbol, complete the following steps:
   a. Select **File → New**
   b. Select **Block Diagram/Schematic File**
   c. Click the **OK** button.
   d. Double-click on the block diagram.
   e. Next to the **Name Box**, click on the **…** button. See Figure 10.
   f. Locate the create symbol and click **OK**.