EE320 LAB EXERCISE #1
Fall 2011

Name: _____ Partner(s): _____

Problem: This exercise will help us gain practice in analyzing, building, and verifying AC circuits. The circuit we will address is shown on the next page in Figure 1. It contains the Function Generator (including a 50Ω internal resistance), two real inductors (including series resistance), and three mounted resistors. Reference ground is assigned as the bottom node and node voltages V_1, V_2, and V_3 are labeled on the diagram.

Step 1: Given nominal values of $R_X = 470\Omega$, $R_Y = 1k\Omega$, and $R_Z = 470\Omega$. Measure and record the mounted resistors at your workstation using the Digital Multi-Meter (DMM). Make sure to measure all components outside of the circuit!

RESISTOR	NOMINAL VALUE	ACTUAL VALUE
R_X	470Ω	_____
R_Y	$1k\Omega$	_____
R_Z	470Ω	_____

Step 2: Using the LC-meter, measure the inductance of the two mounted inductors

INDUCTOR	NOMINAL VALUE	MEASURED VALUE
L_1	$2mH$	_____
L_2	$1mH$	_____

Step 3: Using the DMM ohmmeter, measure the series resistance of the two mounted inductors at your workstation (Note: these values should be < 100Ω)

INDUCTOR	NOMINAL VALUE	SERIES RESISTANCE
L_1	$2mH$	$R_{L1} =$ _____
L_2	$1mH$	$R_{L2} =$ _____

Step 4: Energize and set up the Function Generator (FG),

- Sinusoid
- Frequency set to 100kHz
- Amplitude set to 5.00Vrms (if it will not go this high, it will need to be set to Hi Z output)

Connect the FG output to the DMM voltmeter set to VAC to confirm the open-circuit setting (Recall, the DMM provides measurements in RMS)

$V_{FG} =$ _____

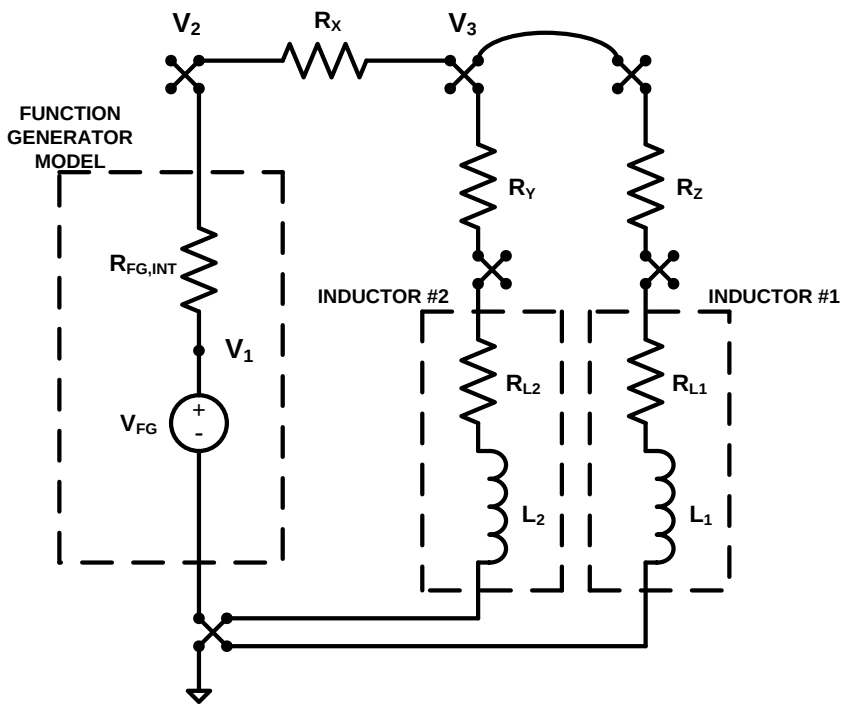

Figure 1: AC Circuit

Step 5: Draw in the space on the next page the frequency-domain representation of the circuit in Figure 1 (use the measured values).

- The internal resistance of the FG is $R_{FG,INT} = 50\Omega$
- What is the value of ω (its units are rad/s)? _____
- Represent the voltage phasor by its rms value. Choose the FG internal voltage phasor $\tilde{V}_{FG}$ as the "reference phasor" (possessing a phase angle of 0°)
- Label all impedances and maintain the same node labeling as Fig 1.

<u>Step 6:</u> Write a set of nodal equations. Note $\tilde{V}_1$ is a known node voltage, so we need KCL equations for nodes 2 and 3. Further, we are assuming that the series impedances in the R_Y - L_2 - R_{L2} and R_Z - L_1 - R_{L1} paths are being combined into an equivalent impedance

<u>Step 7:</u> Solve the nodal equations using the cSolve function in your calculator. Place your solution in *<u>polar form</u>* (using degrees). The syntax for the cSolve function is

cSolve(Equation1 and Equation2 , { V2 , V3 })

where the complex operator "j" is assigned by typing 2nd I and all polar numbers must be included in parentheses

$\tilde{V}_2 =$ _____ $\tilde{V}_3 =$ _____

INSTRUCTOR VERIFICATION: _____

Step 8: Build the circuit on your quad board.

- Note $R_{FG,INT} = 50\Omega$ is internal to the FG and does not need to be added to the circuit
- Resistances R_{L1} and R_{L2} are internal to the two inductors and do not need to be added separately to the circuit

Step 9: Measure the rms voltages at nodes 2 and 3 (relative to the ground node) with your DMM voltmeter set to VAC

$\left|\tilde{V}_2\right| =$ _____ $\left|\tilde{V}_3\right| =$ _____

How does this compare with the theoretical voltage phasor magnitudes (Step #7)?

Step 10: Measure the voltage phase angle difference between $\tilde{V}_2$ and $\tilde{V}_3$ using the oscilloscope (oscope)

- Connect the red jack of CH1 of the oscope to node 2
- Connect the black jack of CH1 to the circuit ground node
- Connect the CH2 jack to node 3 (note, it automatically references to the same ground node as CH1)
- Stabilize the images. Place the images on top of each other in the center of the window (zero volts position is the same)
- Increase the amplitudes as large as possible, measure the time difference using the vertical cursors (zero crossings enable you to zoom in and achieve more resolution! Start with one cycle displayed then decrease)

$\Delta t =$ _____

- Compute the phase difference between the signals in degrees (show your equation)

$\Delta\phi =$ _____

- How does this compare with the phase difference between the theoretical voltage phasors (show your comparison)?

INSTRUCTOR VERIFICATION: _____

<u>Step 11:</u> De-energize the FG and insert the DMM ammeter (set to IAC) **<u>in series</u>** between the FG and R_X. Energize the FG. Measure and record the rms magnitude of the FG current.

$$\left|\tilde{I}_{FG}\right| = _____$$

Compute the theoretical value of $\tilde{I}_{FG}$ (magnitude and phase angle!) by using your theoretical values of $\tilde{V}_2$, $\tilde{V}_3$, and R_X. Compare the magnitude with the above measured value.

<u>Step 12:</u> De-energize the equipment, disconnect your circuit, and return your parts and connection cabling to their original location.

<u>Homework</u>: Recalculate $\tilde{I}_{FG}$ using mesh analysis (using the measured component values)