Fall 2011

EE320
Laboratory Exercise #10
"Regulated Power Supply"

Step 1: Create a 12Vrms secondary transformer

- Ensure that the power supply variable voltage control knob is set at zero (full CCW)
- Connect the 0-120V power supply variable voltage output terminals 4 and N to terminals 1 and 2 of the power transformer
- Connect the secondary terminals 4 and 8 of the transformer to the AC voltmeter terminals of a Fluke meter

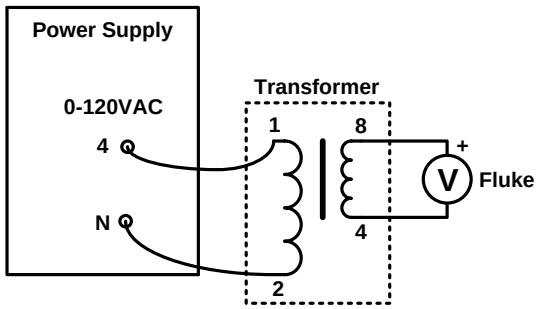

- Turn on the power supply and adjust the secondary voltage to as close to 12Vrms as possible.
- TURN OFF THE POWER SUPPLY but leave the control knob at this setting.
- Disconnect the Fluke meter

Step 2: Couple the transformer to a single-phase bridge rectifier

- We will create a full-wave-bridge rectifier using the Lab-Volt module which should already have its configuration switch set to 0; diodes D_1 and D_2 connected at the top; and diodes D_4 and D_5 connected at the bottom.
- Connect the transformer secondary (terminals 4 and 8) to the terminals between diodes D_1 and D_4 and between diodes D_2 and D_5 as shown below.

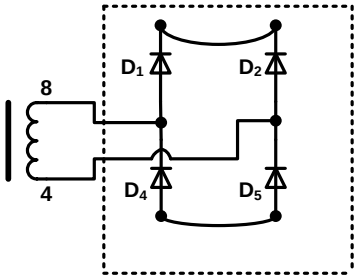

Step 3: Set up the proto-board

- Orient the proto-board so that the four banana jacks are at the lower right corner
- Make connections between the rightmost jacks to the two horizontal busses in the center of the board as shown in the figure below
- Connect the tops and bottoms of the variable resistance strings
- Connect the bottom of the resistance strings to the rightmost jack (ground)
- Connect the top of the resistance strings to the leftmost jack

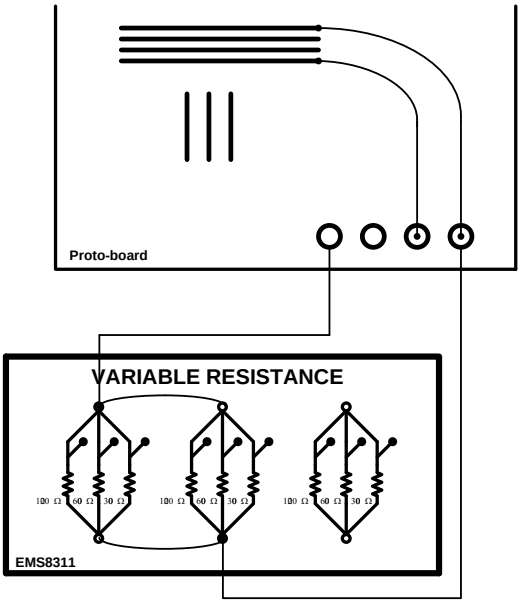

HAVE THE INSTRUCTOR VERIFY YOUR CIRCUIT: _____

Step 4: Insert the LM317 voltage regulator

- The LM317 depicted below has the top facing the viewer (the bottom has the metal tab); A = Adjust terminal, O = Output, I = Input;
- Place the resistors R_1 (A to O) and R_2 (G to A) as shown
- Connect the Input terminal of LM317 (I) to the bottom horizontal bus
- Connect the leftmost jack (top of the resistor bank) to the Output (O) terminal of the LM317

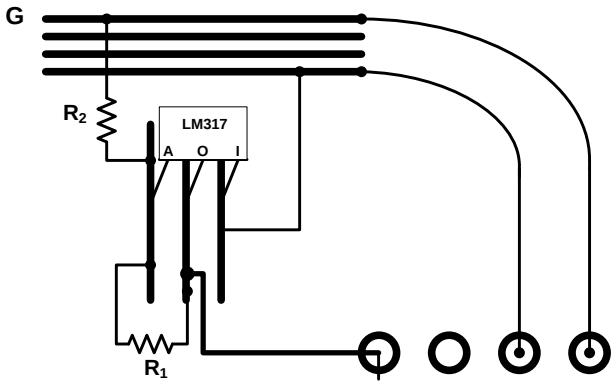

Step 5: Insert the electrolytic capacitors

- Place two 100uF electrolytic capacitors between the two horizontal busses, BEING MINDFUL TO HAVE THE CAPACITOR MINUS SIGN CONNECTED TO THE GROUNG (G) RAIL as shown

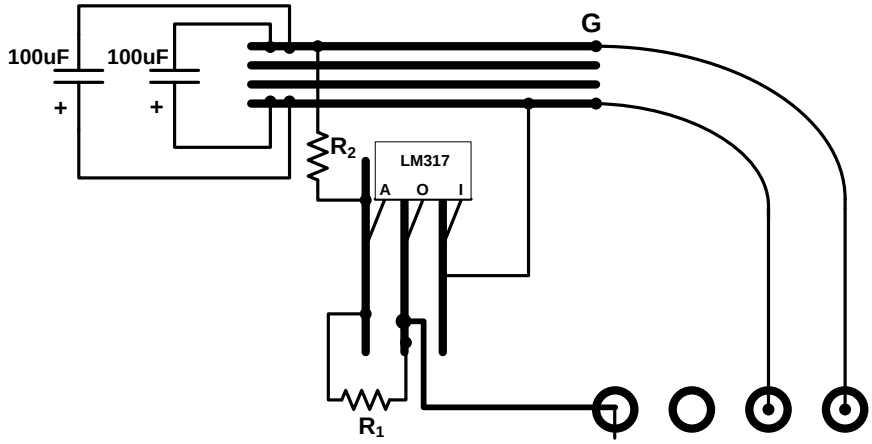

Step 6: Connect the top of the diode bridge to the terminal jack second to the right (+ side of the capacitors); attach the bottom of the diode bridge to the rightmost (G) jack.

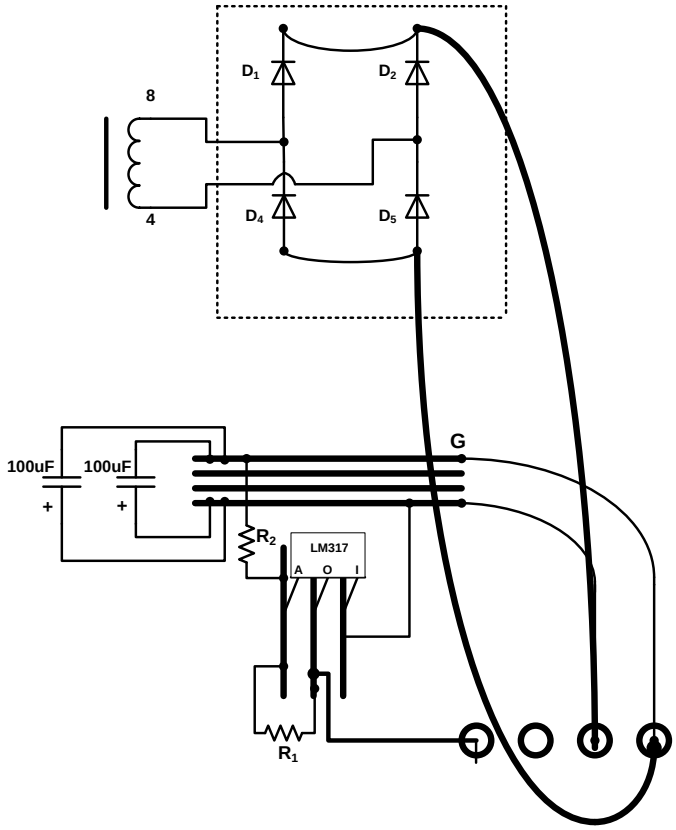

HAVE THE INSTRUCTOR VERIFY YOUR CIRCUIT: _____

<u>Step 7:</u> Finally we need to add some instrumentation

- The oscope is connected via the voltage isolator unit. The oscope should already be coupled to the output of the isolator
- Connect the inputs of the isolator across the diode bridge (which will then necessarily be across the filter capacitors). The inputs are the red jacks labeled 0-30V and com (com should be at the bottom of the diode bridge).
- Connect the Fluke meter across the load resistance and set it to measure DC volts. Set the load resistance to 171Ω by closing in 300Ω, 600Ω, and 1200Ω

HAVE THE INSTRUCTOR VERIFY YOUR CIRCUIT: _____

<u>Step 8:</u> We are ready to energize

- Turn ON the power supply for the voltage isolator unit. Turn on the Oscope.
- Turn ON the main power supply
- Press AUTOSET to secure an image on the Oscope (you may find it convenient to set the trigger to AC LINE)
- Using the CURSORS on the scope, measure and record the peak and trough values of the capacitor waveform and the ripple. NOTE THE VOLTAGE ISOLATOR SCALES EVERYTHING DOWN BY A FACTOR OF 3 SO TAKE THIS INTO ACCOUNT

$V_{C,\max} =$ _____ $V_{C,\min} =$ _____ $\Delta V_C =$ _____

- Record the DC voltage across the load

$$V_{out,DC} = _____$$

- *<u>If there is anything unexpected, please consult the instructor</u>*
- Next, set the load resistance to $171\Omega/2$ by closing in an additional set of 300Ω, 600Ω, and 1200Ω resistors
- Measure and record the peak, trough, and ripple of the capacitor voltage waveform again

$V_{C,\max} =$ _____ $V_{C,\min} =$ _____ $\Delta V_C =$ _____

- Record the DC voltage across the load

$$V_{out,DC} = _____$$

- TURN OFF THE MAIN POWER SUPPLY

- **Step 9:** Let's assume that we wish to reduce the capacitor ripple in this last measurement to 2V by increasing the capacitance. As shown in the notes, based on the new current drawn from the regulator circuit, calculate the new value of capacitance. Show your work here and have the instructor verify your calculation

HAVE THE INSTRUCTOR VERIFY YOUR CALCULATION: _____

Step 10: Add the required capacitance in parallel with the 200uF to achieve the capacitance listed above

HAVE THE INSTRUCTOR VERIFY YOUR CIRCUIT: _____

<u>Step 11:</u> Retake the data

- Turn ON the main power supply
- Using the CURSORS on the scope, measure and record the peak and trough values of the capacitor waveform and the ripple.

$V_{C,\max} =$ _____ $V_{C,\min} =$ _____ $\Delta V_C =$ _____

- Record the DC voltage across the load

$$V_{out,DC} = _____$$

FOLLOW UP QUESTIONS

1. Explain why $V_{C,\max}$ changes from measurement to measurement

2. Determine the average power dissipated in the LM317 for the three measurement conditions