EE320 LAB EXERCISE #2
"AC Power"
Fall 2011

Name: _____ _____ Partner(s): _____ _____

Problem: In this exercise, we will explore concepts of AC power by using the capacitor-start induction motor as a case study. Fractional horsepower (< 1HP) single-phase induction motors are found throughout a residence. Examples include the refrigerator compressor, garage door opener, garbage disposal, clothes washer and dryer, dishwasher, ceiling fan, vacuum cleaner, and at higher power level, central air conditioner compressor and fan. We will NOT be discussing the induction machine principle of operation but instead focus on the motor as being a typical single-phase AC load and gain practice taking measurements and making calculations

<u>Step 1:</u> We will be using *<u>either</u>* the PM300 power analyzer or the AEMC 3945-B power analyzer to take measurements today. For the PM300, each channel has a separate AC ammeter and voltmeter as shown in Figure 1, with the positive end indicated by "yellow" and the negative end indicated by "black.". If you have one at your bench, inspect the unit and identify the terminals of each meter for channel 1

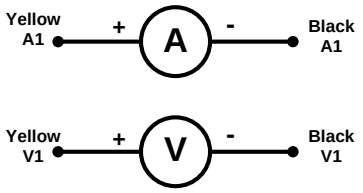

Figure 1: Channel One of the PM300 Power Analyzer

Typically, we insert one channel of the power analyzer into a circuit as shown in Figure 2, where the ammeter (in series) measures the current going into the circuit and the voltmeter (in parallel) measures the voltage across the circuit.

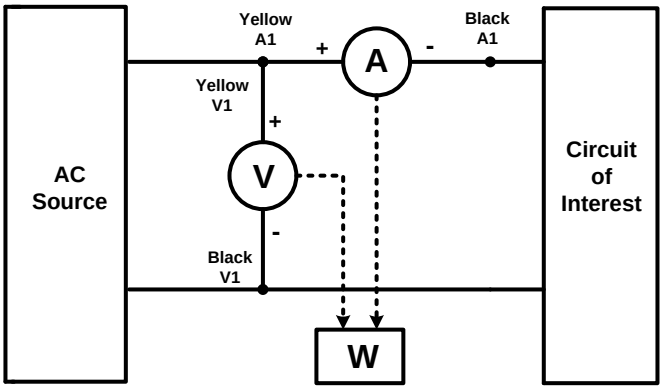

Figure 2: Typical Single-Phase Measurement Circuit for PM300

Internal circuitry then allows the meter to calculate and display the real power (W), reactive power (VAR), apparent power (VA), and the power factor (PF) as well. More advanced features enable you to assess levels of harmonic distortion (THD).

Alternatively, you may be using the AEMC 3945-B power analyzer. The connection terminals at the top of the meter are configured as shown in Figure 3. The biggest difference is that this meter has clamp-on current probes with a single connection terminal. The current probe should be attached with the probe arrow in the intended measurement direction. Each voltmeter terminal shown in Figure 3 is referenced relative to the terminal marked N.

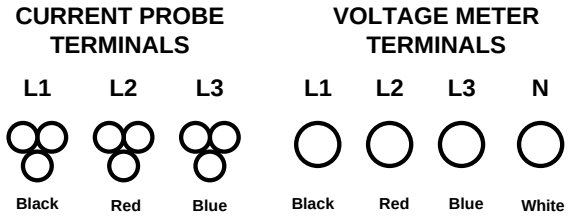

Figure 3: Terminals of the AEMC 3945-B Power Analyzer

In contrast with Figure 2, the AEMC analyzer is hooked up as shown in Figure 4 for a single-phase system. The front panel is shown in Figure 5. Note the power ON button is set to the lower left, there is a button to request the voltage and current measurement screen (denoted by "~"), and finally there is a button to request the power measurements for the combination of two meters L1-L1 (denoted by "W").

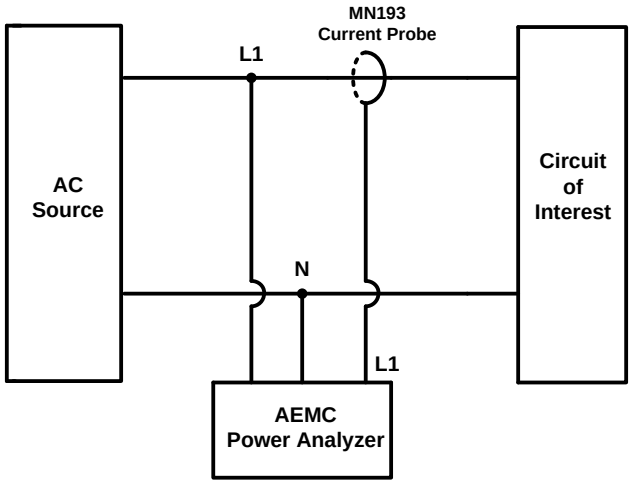

Figure 4: Typical Single-Phase Measurement Circuit for AEMC 3945-B

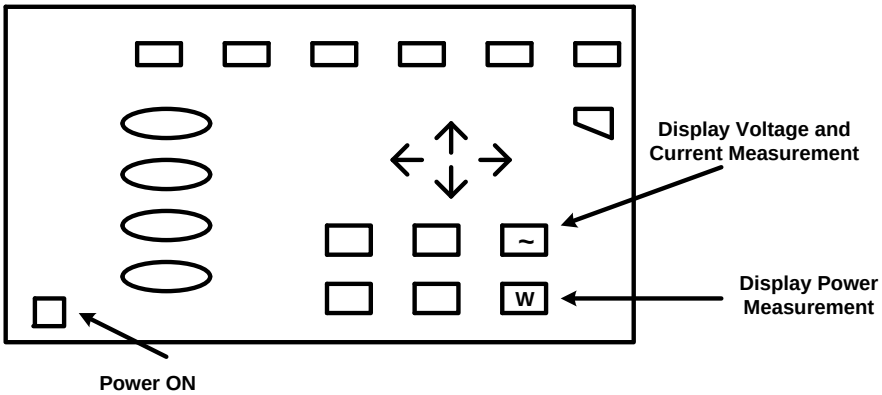

Figure 5: Front Panel Control Buttons for AEMC 3945-B

<u>Step 2</u>: Identify the 1/4HP Lab-Volt EMS8251 capacitor-start motor module at your workstation mobile console. The following terminals are relevant:

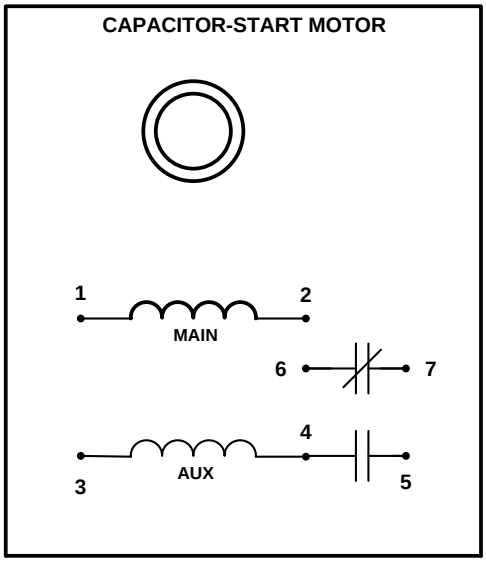

Figure 6: Capacitor-Start Motor Module

Terminals 1 & 2: Main phase winding
Terminals 3 & 4: Auxiliary phase winding required for starting
Terminals 4 & 5: An AC capacitor for use in starting
Terminals 6 & 7: A centrifugal switch that opens at ~75% rated speed

From the faceplate, identify the rated voltage and current of the Main winding and the rated power output and speed in RPM (N) of the machine.

$V_{Main,rat} =$ _____ $I_{Main,rat} =$ _____

$P_{rat} =$ _____ $N_{rat} =$ _____

Note that the induction machine shaft is already coupled to an electric dynamometer via a timing belt. The dynamometer enables us to impress a variable load torque on the motor so we can investigate its current and speed characteristics at various operating points. Further, note that there is a 24V power cable that goes from the power supply to the dynamometer and there is a toggle switch that allows us to read the speed in RPM or the torque in Newton-meters. The remaining switches on the dynamometer should be set as follows:

- Set to Dynamometer Mode
- Set to Manual
- Manual knob full CCW (zero torque)

<u>Step 3</u>: Identify the Lab-Volt EMS8821 Power Supply located in your mobile console. Note the following capability and list the maximum allowable current out of each.

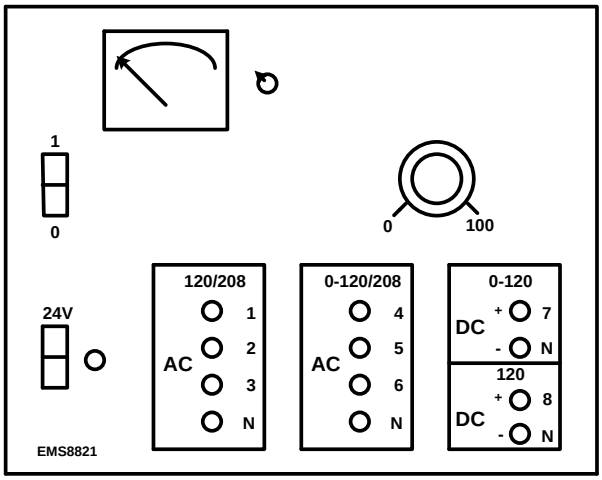

Figure 7: EMS8821 Power Supply

	Max Current
• Terminals 1,2,3,N: Fixed 1-Phase and 3-Phase AC	_____
• Terminals 4,5,6,N: Variable 1-Phase and 3-Phase AC	_____
• Terminals 7,N: Variable DC	_____
• Terminals 8,N: Fixed DC	_____
• 24V Fixed DC	_____

The control knob is marked with settings from 0% to 100% of full scale. The analog meter displays the voltage for the terminals indicated by the adjacent selector knob. Today, we will be using the 24VDC supply to energize the dynamometer electronics and terminals 1-N to provide fixed 120Vrms, 60Hz AC.

Step 4: Using connection cabling hung on the side of the mobile console, make the following connections on the induction motor:

- Connect terminals 1 and 3
- Connect terminals 2 and 6
- Connect terminals 7 and 4

Step 5A: Make the following connections (if you are using the PM300 meter):

- From the power supply, connect terminal 1 to the Yellow connection plugs A1 and V1 of the power analyzer
- Connect the corresponding terminal N of the power supply to both the Black connection plug V1 of the power analyzer and to terminals 1 & 3 of the induction motor
- Finally, connect the Black A1 plug of the power analyzer to terminals 2 and 6 of the induction motor.

The resulting complete wiring diagram is as shown in Figure 8.

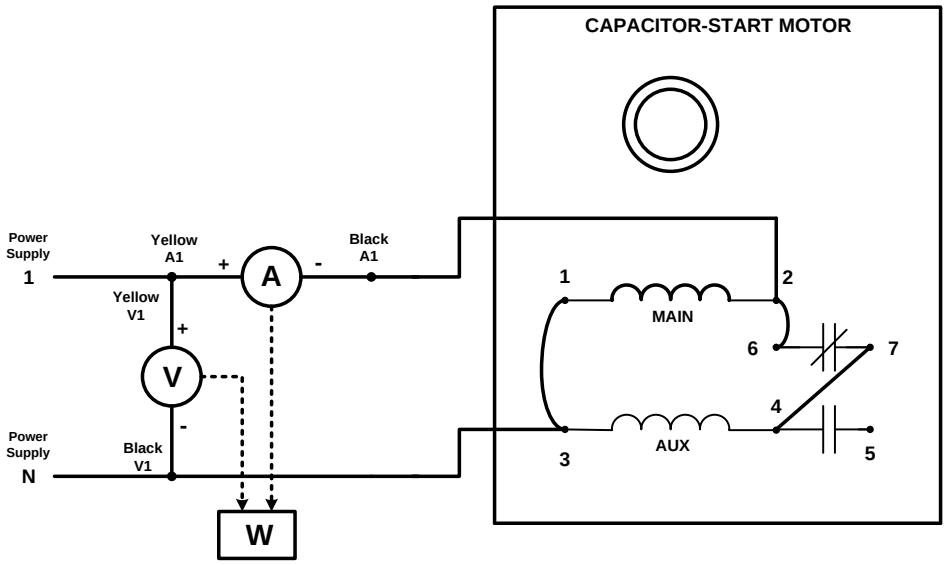

Figure 8: Main Circuit Connections (with PM300 analyzer)

HAVE THE INSTRUCTOR VERIFY YOUR SETUP: _____

Step 5B: Make the following connections (if you are using the AEMC meter):

- Connect terminal 1 of the power supply to terminals 2 & 6 of the induction motor. Clamp the MN193 current probe around this conductor with the arrow pointing into the motor. Connect voltmeter terminal L1 to power supply terminal 1.
- Connect the corresponding terminal N of the power supply to terminals 1 & 3 of the induction motor. Connect voltmeter terminal N to power supply terminal N.

The resulting complete wiring diagram is as shown in Figure 9.

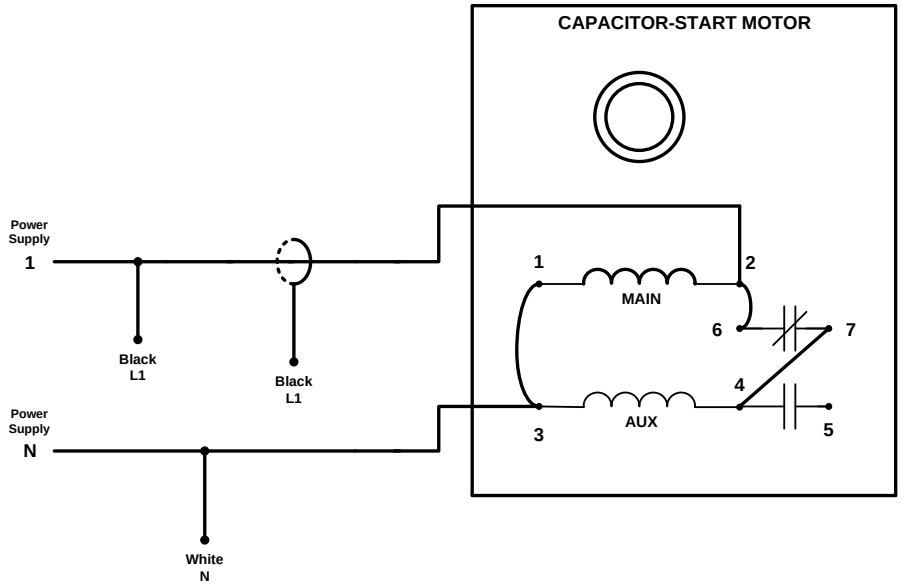

Figure 9: Main Circuit Connections (with AEMC analyzer)

<u>HAVE THE INSTRUCTOR VERIFY YOUR SETUP</u>: _____

<u>Step 6</u>: Energize the 24VDC power supply and the main power supply switch. The motor should be running. Toggle the switch on the dynamometer so you can read the motor speed and the applied torque.

N_{rpm} = _____ T_{Nm} = _____

Record the voltage, current, and power displayed by the power analyzer (note for the AEMC analyzer, both the current and power are scaled by 200 – record the unscaled value. Press the W key to read power; the ~ key to return to voltage/current)

V = _____ I = _____ P = _____

TURN OFF THE AC POWER SUPPLY

<u>Step 7</u>: calculate the apparent power, reactive power, and power factor (show the equation you used in the first blank)

	Expression		Value + Units
S =	_____	=	_____
Q =	_____	=	_____
pf =	_____	=	_____

If we know that the induction motor appears inductive (rather than capacitive), complete the following

$\tilde{I}$ (LEADS , LAGS) $\tilde{V}$ by _____ degrees

Step 8: Let's next model the induction motor at this operating point by an equivalent impedance as shown in Figure 10. You can calculate R_{EQ} and X_{EQ} using the values for P and Q or by directly evaluating the impedance from the voltage and current phasors.

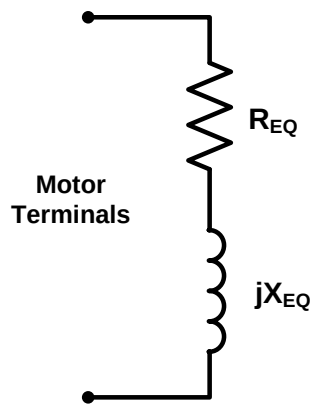

Figure 10: Induction Motor Equivalent Circuit

	Expression		Value + Units
R_{EQ} =	_____	=	_____
X_{EQ} =	_____	=	_____

Step 9: Let's investigate a new operating point

- TURN ON THE AC POWER SUPPLY
- Toggle the dynamometer monitor switch to torque (instead of speed)
- Slowly adjust the torque setting to 0.4Nm
- The induction motor current and speed should both have changed
- Record the data here

N_{rpm} = _____ T_{Nm} = _____

Record the voltage, current, and power displayed by the power analyzer (note for the AEMC analyzer, both the current and power are scaled by 200 – record the unscaled value. Recall, the W key provides power measurements)

V = _____ I = _____ P = _____

TURN OFF THE AC POWER SUPPLY

Re-calculate the apparent power, reactive power, and power factor

	Expression		Value + Units
S =	_____	=	_____
Q =	_____	=	_____
pf =	_____	=	_____

Finally, re-evaluate the equivalent impedance "seen" looking into the machine

	Expression		Value + Units
R_{EQ} =	_____	=	_____
X_{EQ} =	_____	=	_____

Step 10: Efficiency for an electric motor is the ratio of useful output mechanical power to input real electrical power, expressed as a percent. Here our output power is the power supplied to the electric dynamometer. To calculate this power, we need to multiply torque in Newton-meters by speed in radians/sec. To convert rpm to radians-per-second, consider

$$\omega_{rps} = N_{rpm} \times \frac{2\pi}{rev} \times \frac{1\,\text{min}}{60\,\text{sec}} = N_{rpm} \times \frac{\pi}{30}$$

The output power is then computed as $P_{out} = T_{Nm} \times \omega_{rps}$. The input power is what we measure with the power analyzer. Then efficiency is given by $\eta = \frac{P_{out}}{P_{in}} \times 100$. Evaluate the efficiency of the induction motor at 0.4Nm.

η = _____

<u>Step 11</u>: Let's investigate the impact of adding impedance in parallel with the induction motor.

- Dial the dynamometer load torque down to 0Nm
- Consider the EMS8331 variable capacitance module which is located in your mobile console. The switch in the "up" position means that the capacitor is in the circuit; in the down position means the capacitor is out of the circuit.

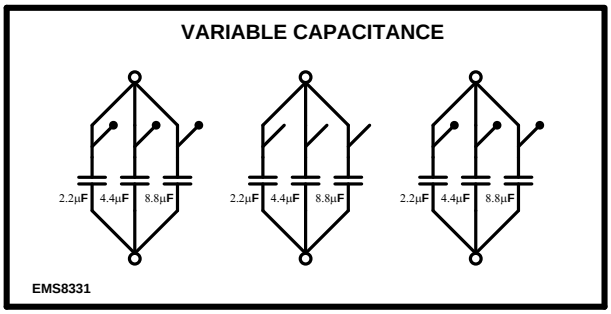

Figure 11: Variable Capacitance Module

- Have all of the switches in the UP position, then connect up the three top and lower terminals as shown in Figure 12

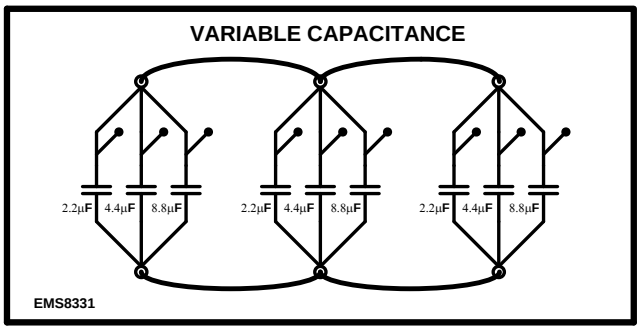

Figure 12: Variable Capacitance Module All Capacitors in Parallel

- Determine the total parallel capacitance

$$C_{TOT} = _____$$

And the equivalent reactance (what is the frequency?)

$$X_{TOT} = _____$$

- Connect the top capacitance module terminal to terminal 2 of the motor and the bottom capacitance module terminal to terminal 3 of the motor.

<u>HAVE THE INSTRUCTOR VERIFY YOUR SETUP</u>: _____

- Energize the power supply
- Record the data

  V = _____ I = _____ P = _____

- Calculate the apparent power, reactive power, and power factor looking into the aggregate motor/capacitor system

	Expression		Value + Units
S =	_____	=	_____
Q =	_____	=	_____
pf =	_____	=	_____

Step 12: De-energize the power supply. Disconnect all cabling and return it to the side of the mobile console. Leave the cabling connected to the back of the PM300 analyzer and the top of the AEMC analyzer. Leave all modules in the mobile console.

Follow-Up Problem: Use the equivalent impedance of the induction machine found in Step 8 along with the impedance of the capacitor to analytically predict the input current phasor (using circuit analysis). Assign the input voltage as the reference phasor and use the voltage magnitude measured in Step 11. Also, calculate the real and reactive power absorbed by the aggregate motor/capacitor system.