GIVEN:

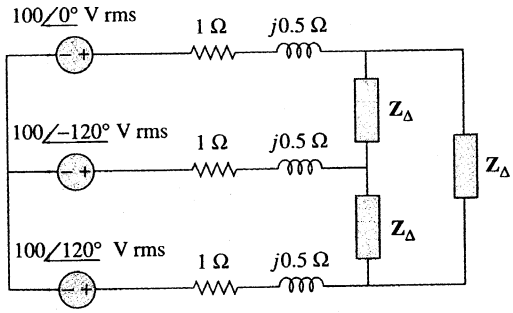

$$Z_\Delta = 21 + j24 \ \Omega$$

FIND: P_Δ

SOLN: WE HAVE A WYE-DELTA SYS - SO CONVERT TO WYE-WYE

$$Z_Y = \frac{Z_\Delta}{3} = 7 + j8 \ \Omega$$

ON A PER ϕ BASIS ... $100\angle 0 = I_L\left[(1 + j0.5) + (7 + j8)\right]$

$$I_L = 8.6\angle -46.7^\circ \ A_{RMS}$$

FOR LOAD ... $P_\phi = I_L^2 \left(Re\{Z\}\right)$

$$= (8.6)^2(7)$$

$$= 513.8 \ W$$

AND $P_\Delta = 3P_\phi = \underline{1.54 \ KW}$

TOPS. 35510 - 100 sheets 35520 - 200 sheets

GIVEN: $L_1 = 250\ KVA \quad pf = 0.8\ LAG$

$L_2 = 300\ KVA \quad pf = 0.95\ LEAD$

$L_3 = 450\ KVA \quad pf = 1$

$V_L = 13.8\ KV$

FIND: A) I_L B) pf

SOLN: $S_T = P_T + jQ_T = \sqrt{3}\, V_L I_L$

SO, $P_T = 250(0.8) + 300(0.95) + 450 = 935\ KW$

$Q_T = 250 \sin(\cos^{-1}(0.8)) - 300 \sin(\cos^{-1}(0.95)) = 56.3\ KVAR$

$\therefore \underline{I_L = 39.2\ A_{RMS}}$

$\underline{pf = 0.99 \quad LAG}$

$pf = \cos(\theta)$

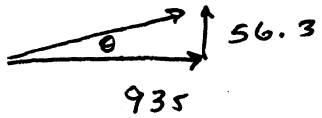

$\theta = 3.4$

TOPS. 35510 - 100 sheets 35520 - 200 sheets

GIVEN: $Z_{LOAD} = 20 + j10$

$V_L = 220\ V_{RMS}$

FIND: P_T IF LOAD IS Δ & WYE

SOLN: FOR Δ:

$$I_\phi = \frac{V_\phi}{Z} = \frac{220\angle 0}{20+j10} = \underline{9.84\angle -26.6^\circ\ A_{RMS}}$$

AND $P_\phi = V_\phi I_\phi\, pf = 220(9.84)\cos(-26.6)$

$= 1.94\ KW$

$P_T = 3P_\phi = \underline{5.8\ KW}$

FOR WYE:

$$V_\phi = \frac{220}{\sqrt{3}} = 127 \qquad I_\phi = \frac{V_\phi}{Z} = 5.68\angle -26.6^\circ\ A_{RMS}$$

$P_\phi = 127(5.68)\cos(-26.6)$

$= 645\ W$

$P_T = \underline{1.94\ KW}$

TOPS 35510 - 100 sheets 35520 - 200 sheets