Pb 13.73

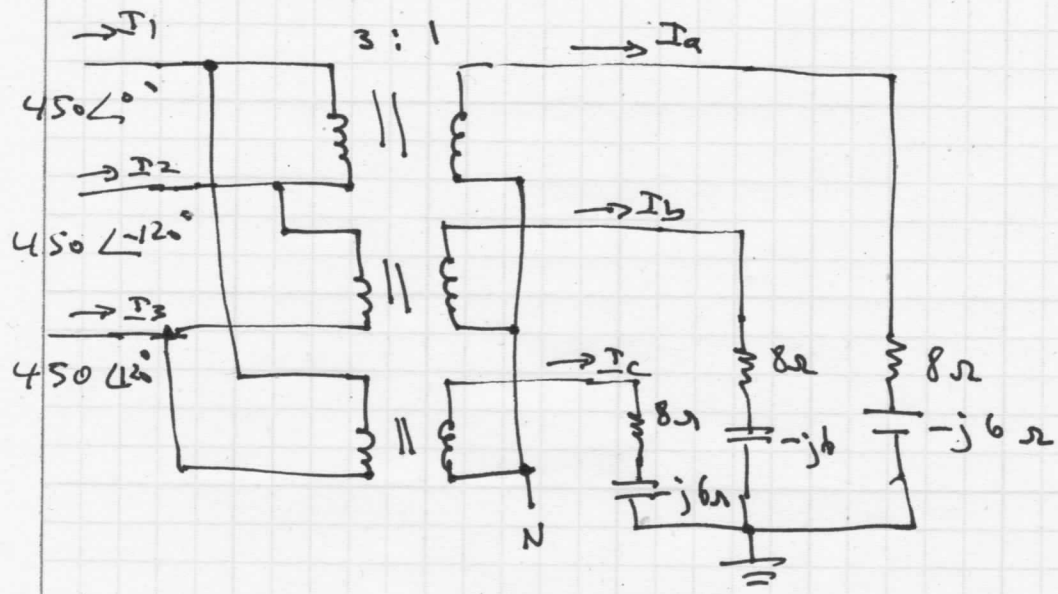

a) Primary is Δ-connected. Secondary is Wye-connected

I_1, I_2, and I_3 are line currents. $V_{Lp} = V_{pp} = 450\,V_{rms}$.

b) use the following notation

V_{Lp} = RMS value of line voltage in primary

V_{pp} = " " phase " "

V_{Ls} = " " of line voltage in secondary

V_{ps} = " " " phase " "

$V_{Lp} = V_{pp} = 450\,V_{rms}$.

$$V_{ps} = N \cdot V_{pp} = \frac{1}{3}\,450 = 150\,V_{rms}.$$

$$I_{c_{RMS}} = \frac{V_{ps}}{|Z_Y|} = \frac{150}{|8-j6|} = \frac{150}{10} = 15\,A_{rms}.$$

$$I_{pp} = N \cdot I_{c_{RMS}} = \frac{3}{3}\,15 = 5\,A_{rms}.$$

$I_{2_{RMS}}$ = line current for the primary $= \sqrt{3} \cdot I_{pp} = \sqrt{3} \times 5$

$= 8.67\,A_{rms}$.

$$\boxed{\begin{aligned} I_{2_{RMS}} &= 8.67\,A_{rms}. \\ I_{c_{RMS}} &= 15\,A_{rms}. \end{aligned}}$$

(c) Average power absorbed by the load.

$$P = 3 \times 8 \times (15)^2 = 5.4 \text{ KW}.$$

Pb 13.74

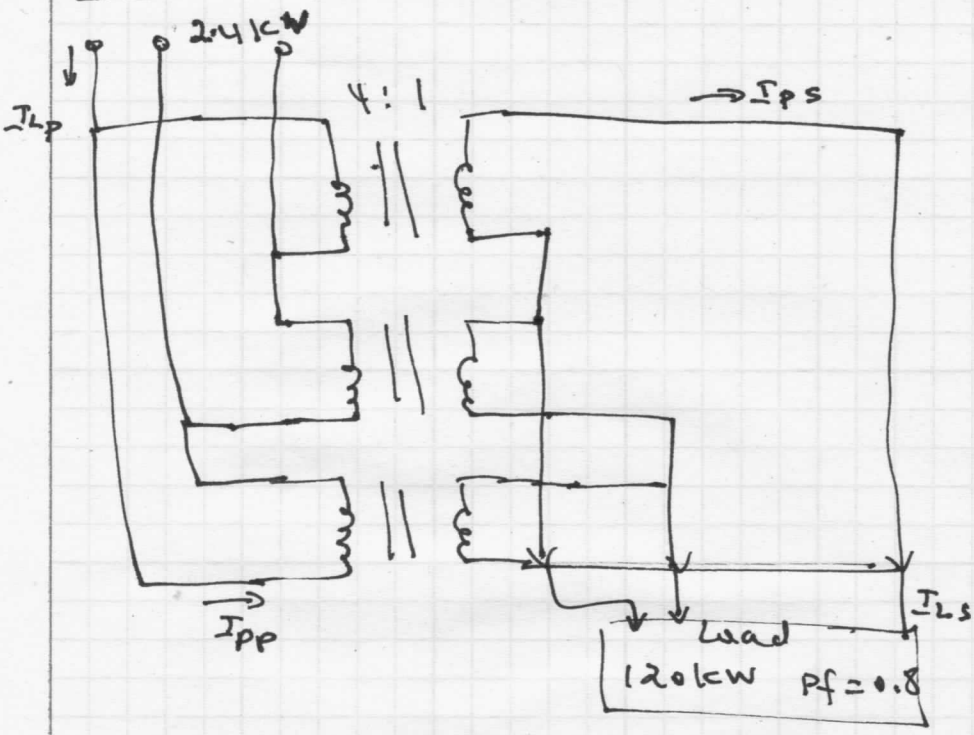

$N = \frac{1}{4}$

a) primary is Δ-connected, secondary Δ-connected.

$V_{Lp} = 2.4$ KV.

b) $P_{Load} = 3\, V_{ps} \cdot I_{ps} \cdot \cos\theta = \sqrt{3}\, V_{Ls} \cdot I_{Ls} \cdot \cos\theta$

$$V_{Ls} = N V_{Lp} = \frac{2.4}{4} = 0.6 \text{ KV} = 600 \text{ V}.$$

$$I_{Ls} = \frac{P_{Load}}{\sqrt{3}\, V_{Ls} \cdot \cos\theta} = \frac{120 \times 10^3}{\sqrt{3} \times 600 \times 0.8} = 144.34 \text{ Arms}.$$

$$I_{Lp} = N I_{Ls} = \sqrt{3}\, I_{pp}.$$

$$I_{Ls} = \sqrt{3}\, I_{ps} \Rightarrow I_{ps} = \frac{I_{Ls}}{\sqrt{3}} = \frac{144.34}{\sqrt{3}} = 83.34 \text{ Arms}$$

$$\boxed{\begin{aligned} I_{Ls} &= 144.34 \text{ Arms} \\ I_{ps} &= 83.34 \text{ Arms}. \end{aligned}}$$

13.75

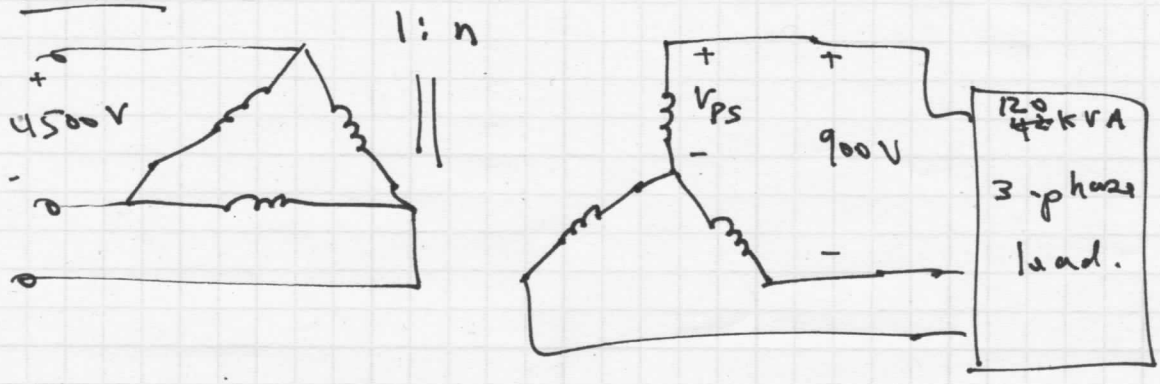

a) $V_{Lp} = 4500\ V_{rms} = V_{pp}$

$V_{Ls} = 900\ V_{rms} \Rightarrow V_{ps} = \frac{V_{Ls}}{\sqrt{3}} = \frac{900}{\sqrt{3}} = 519.62\ V_{rms}$

$N = \frac{V_{ps}}{V_{pp}} = \frac{519.62}{4500} = 0.115$

b) $S_s = 120\ kVA = \sqrt{3}\ V_{Ls} \cdot I_{Ls} \Rightarrow I_{Ls} = \frac{120 \times 10^3}{\sqrt{3} \times 900}$

$I_{Ls} = 76.98\ A_{rms} = I_{ps}$ since Y-connected.

$I_{pp} = N \cdot I_{ps}$ and $I_{Lp} = \sqrt{3}\ I_{pp}$ (Δ-connected)

$I_{Lp} = \sqrt{3} \cdot N \cdot I_{ps} = \sqrt{3} \times 0.115 \times 76.98 = 15.34\ A_{rms}$.

$$\boxed{\begin{aligned} I_{Ls} &= I_{ps} = 76.98\ A_{rms} \\ I_{Lp} &= 15.34\ A_{rms}. \end{aligned}}$$