6.0 Buck Chopper Main Diode

Recall from Electronics I that a diode employs P and N-type material where the P-type material has free holes and the N-type material has free electrons. The interface is termed the PN-junction. When a forward bias is applied to the diode, the free holes and electrons are propelled across the PN-junction and we get current flow as illustrated in Figure 6.1. When a reverse bias is applied, the free holes and electrons are pulled away from the PN-junction creating a low-charge region called the depletion region.

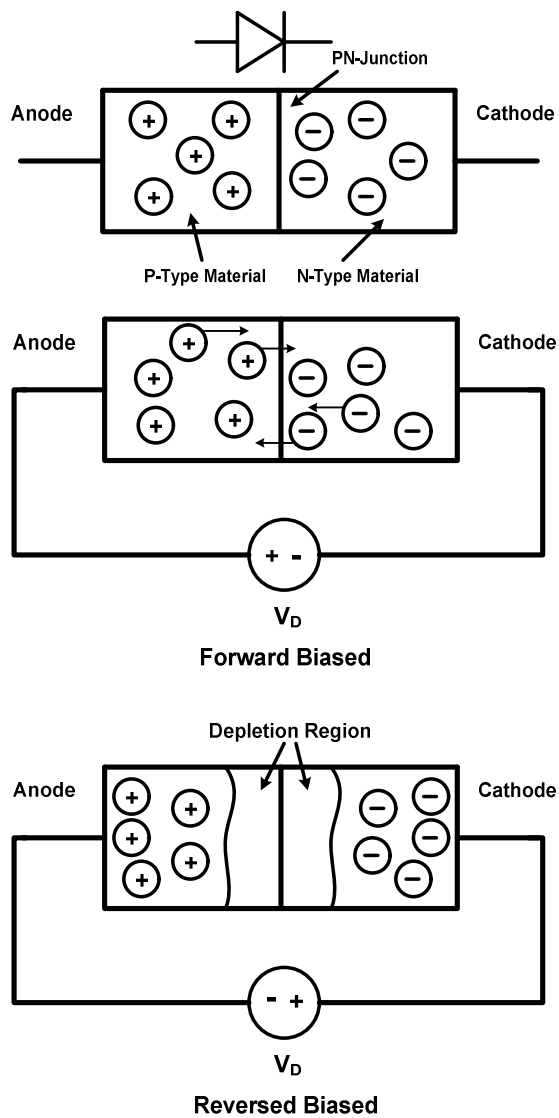

Figure 6.1: Cartoon Depiction of Diode Operation

Associated with this charge separation is an electric field as well as a capacitance. This is where it gets tricky! There is a dynamic process involved with turning off a diode and establishing the required charge separation. Charge must be removed from the diode through what is termed a *reverse recovery process* so that the depletion region may grow.

This negative flow of current is illustrated in Figure 6.2. The current labeled I_{ON} is the diode current when it is forward biased and conducting. As the diode turns off, the current goes to a negative peak value, denoted here as I_{rr}, then goes to zero in a time designated as t_{rr}, the reverse recovery time. The area under the waveform as the diode is turning off is the reverse recovery charge Q_{rr}. Typically it is related to the other two quantities by

$$Q_{rr} = \frac{1}{2} I_{rr} t_{rr} \tag{6.1}$$

The peak value of the reverse recovery current and the reverse recovery time are both dependent on the forward current through the diode and the junction temperature of the diode. The relationship is given as a set of curves on the data sheets to be discussed in the next section. Diodes are characterized as *standard*, *fast*, or *ultrafast recovery*, and *Schottky Barrier Diode* (SBD). A standard recovery diode may have a reverse recovery time on the order of microseconds. By doping the diodes with extra recombination sites, diode turn off can be accelerated to under 50ns. *Fast REcovery Diodes* (FREDs) are critical for applications requiring high switching frequencies. A Schottky diode is created by connecting a metal to a semiconductor. Schottky diodes have extremely low reverse recovery time and a small forward voltage drop at the expense of having a much larger leakage current and lower rated voltages (typically less than 150V).

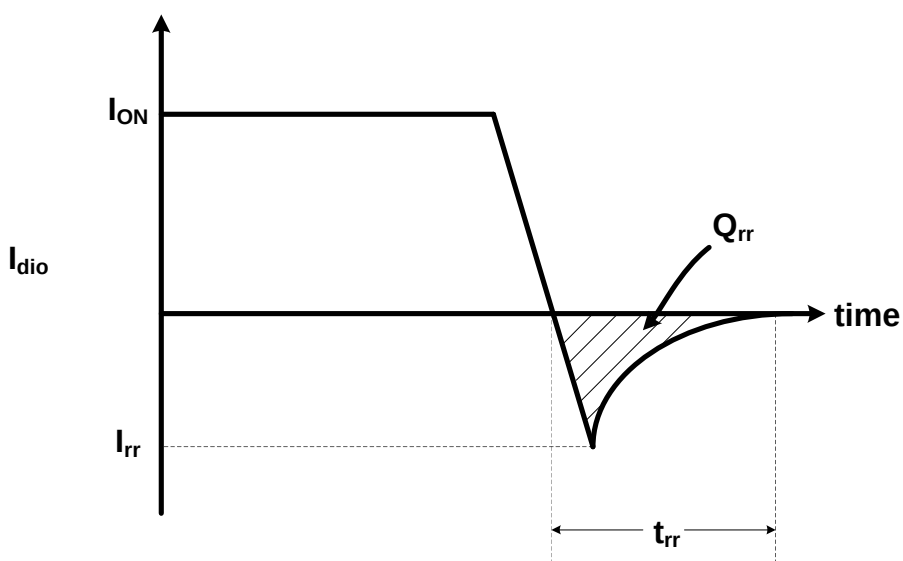

Figure 6.2: Reverse Recovery Process During Diode Turn Off

In addition to reverse recovery time, a diode data sheet will list the peak repetitive reverse voltage (V_{RRM}), the average rectified forward current (I_{FAV}), the repetitive peak surge current (I_{FRM}) and the non-repetitive peak surge current (I_{FSM}). The forward voltage

drop V_F is provided as a data curve versus forward current and then parameterized versus temperature. The losses associated with the diode are due to the voltage drop plus the reverse recovery charge. To help see the result, let's first ignore the reverse recovery effect and consider the steady-state buck chopper current waveforms shown in Figure 6.3. If we further ignore the variation of the diode forward voltage drop with forward current (determining its value say at the average of the inductor current using the device data sheets), the last graph shows the conduction power loss of the diode. To quantify it, we need to find the area under the curve, then divide by the switching period

$$P_{Dio,cond} \approx \frac{\left(\frac{I_{\max} + I_{\min}}{2}\right) \times V_F \times (1-D) \times T_{SW}}{T_{SW}} \tag{6.2}$$

Upon substituting for the average inductor current, we get

$$P_{Dio,cond} = V_F \times I_{L,ave} \times (1-D) \tag{6.3}$$

In terms of the reverse recovery charge, each cycle this charge must be swept out of the diode in order to build the blocking voltage across the diode from its conducting value to the input voltage. Let's consider some "idealized" waveforms for a buck chopper shown in Figure 6.4. Note, reverse recovery will occur when the diode is turning OFF and the FET is turning ON, so the process initiates when the inductor current is at its minimum value.

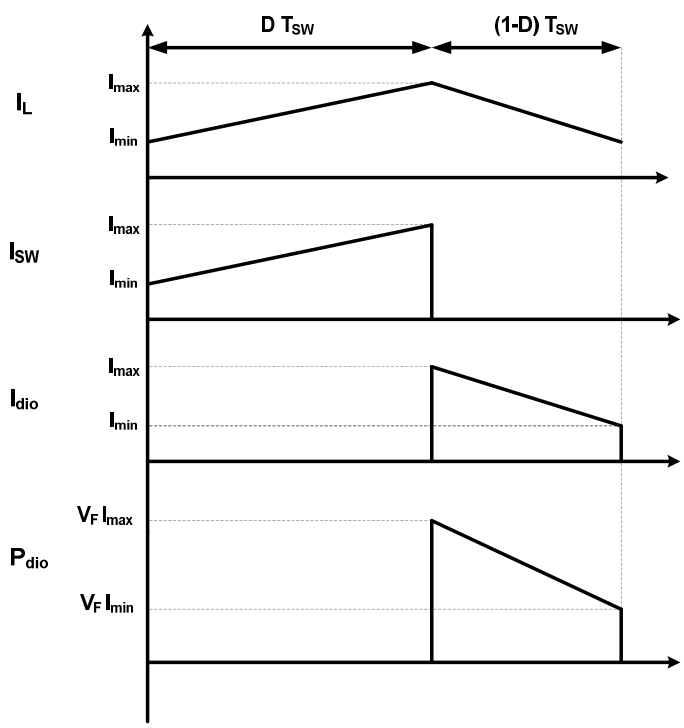

Figure 6.3: Idealized Buck Chopper Current and Diode Power Waveforms

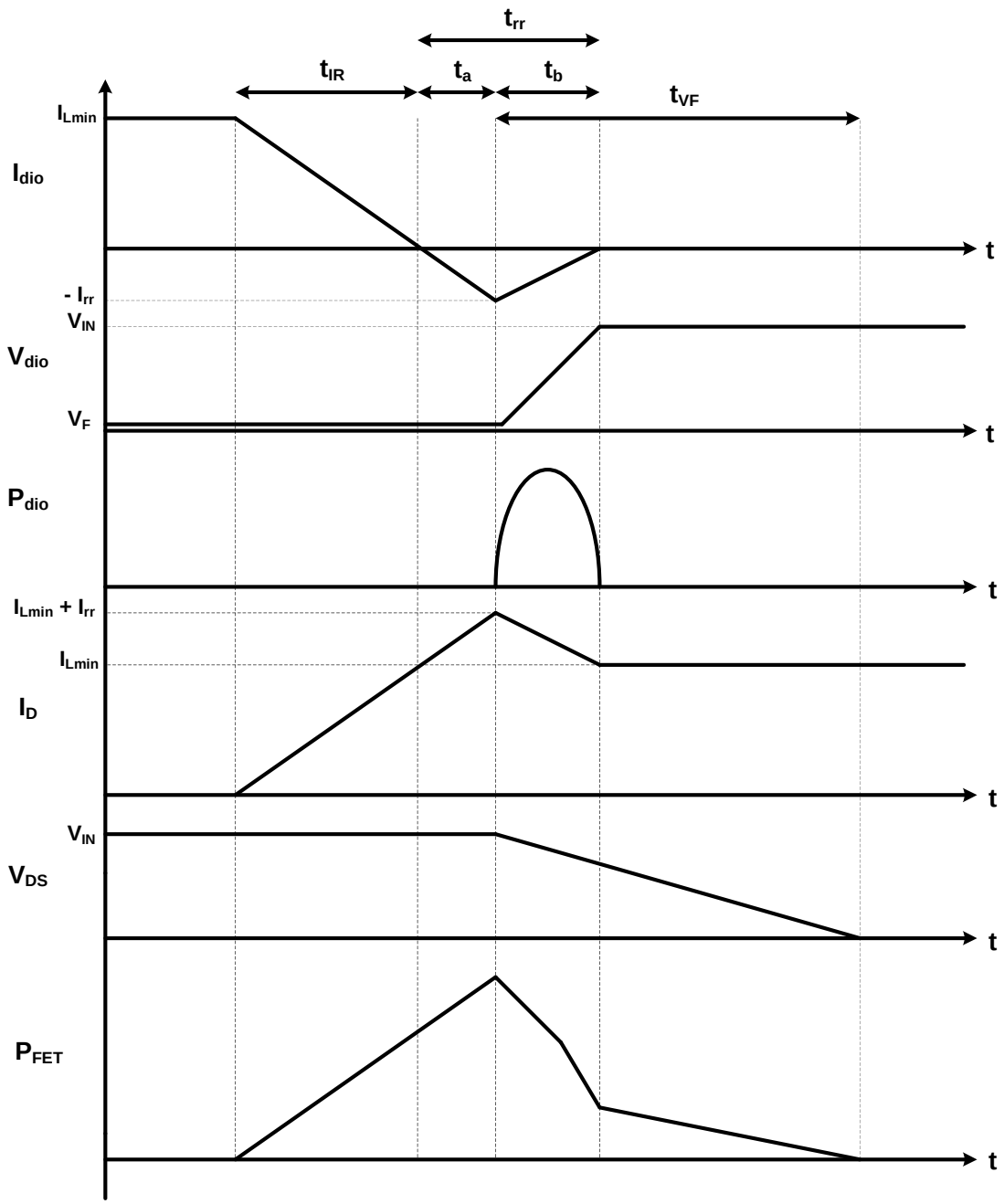

Figure 6.4: Illustration of Reverse Recovery Effects in Buck Chopper

First as V_{GS} builds above $V_{GS,TH}$ on the FET, current is diverted from the diode (I_{dio}) to the FET (I_D). This current rise time is strongly influenced by the external gate resistance and the capabilities of the driver. When the diode hits zero at the end of t_{IR}, additional charge must be pulled out of the diode so that it can grow the depletion region and regain its voltage blocking capability. Thus the diode current drops down to $-I_{rr}$ over the time interval marked t_a. KCL must still hold at the node where the FET, diode, and inductor are connected and the inductor current cannot change quickly, so this reverse recovery current must flow through the FET. This is shown in Figure 6.4 as the drain current rising to $I_{L\min} + I_{rr}$. At the end of t_a, the diode is now ready to start turning off and its blocking voltage starts to build while the voltage across the FET falls. By adding current through the FET while the drain-source voltage is still high can add considerably to the FET switching losses.

During t_b, the diode voltage builds to V_{IN}, where the actual trajectory may overshoot due to circuit inductances (but this gives a rough approximation). The combination of the intervals t_a and t_b constitute the reverse recovery time t_{rr}. The ratio of $\frac{t_b}{t_a}$ is what is defined as the diode "snappiness," an indication of how fast the diode snaps back down to zero. Returning to Figure 6.4, as the diode current goes to zero, the FET drain current settles in at $I_{L\min}$ and the FET voltage continues to decrease towards its final on-state value. The picture was intentionally drawn such that the recovery time is shorter than the FET turn-on time $t_{IR} + t_{VF}$. Some recommend that t_{rr} should be at least a factor of three times smaller than the FET turn-on time in order to manage the additional reverse recovery losses. Speaking of, let's try to estimate these losses being mindful that the actual waveform signals will be far from linear and can be strongly influenced by component and stray inductances.

The area under the diode power loss shown in Figure 6.4 represents the energy dissipated within the diode due to reverse recovery. This divided by the switching period will give us the average power lost in the diode due to reverse recovery. Here we need to make a decision since the time t_b is not typically listed as a diode parameter. If we are comfortable with the linear decrease in the diode current down to I_{rr}, we can always use that slope information to then calculate t_a. The time t_b is then found from $t_{rr} - t_a$. We can then determine (via integration) that

$$P_{dio,rr} = \frac{V_{IN} I_{rr}}{6} t_b f_{SW} \tag{6.4}$$

If we are simply trying to worse-case-estimate the value, we can always assume a "soft recovery diode" where $t_b > t_a$ and approximate t_b by t_{rr}. Thus

$$P_{dio,rr} \approx \frac{V_{IN} I_{rr}}{6} t_{rr} f_{SW} \approx \frac{1}{3} V_{IN} Q_{rr} f_{SW} \tag{6.5}$$

In terms of the switching losses in the FET, we can simplify our life a bit by assuming that the drain-source voltage does not change much during t_b (so assume it is constant at V_{IN}). The resulting area calculations are not too arduous and we find that

$$P_{FET,SW} = \frac{\frac{1}{2} V_{IN} I_{L\min} \left(t_{IR} + t_{VF} \right)}{T_{SW}} + \frac{V_{IN} t_{rr} \left(I_{L\min} + \frac{1}{2} I_{rr} \right)}{T_{SW}} - \frac{\frac{1}{2} V_{IN} I_{L\min} t_b}{T_{SW}} \tag{6.6}$$

Where the first term is the same term that we had previously for switch turn on and the two other terms constitute the effects of reverse recovery. If we again assume soft recovery and estimate t_b by t_{rr}, we can simplify this expression to

$$P_{FET,SW} \approx \frac{1}{2} V_{IN} I_{L\min} \left(t_{IR} + t_{VF} \right) f_{SW} + \frac{1}{2} V_{IN} t_{rr} \left(I_{L\min} + I_{rr} \right) f_{SW} \tag{6.7}$$

Which if you are feeling sassy, you can rewrite in terms of the reverse recovery charge as

$$P_{FET,SW} \approx \frac{1}{2} V_{IN} I_{L\min} \left(t_{IR} + t_{VF} + t_{rr} \right) f_{SW} + V_{IN} Q_{rr} f_{SW} \tag{6.8}$$

If nothing else, equations (6.5) and (6.8) demonstrate that a diode with higher reverse recovery charge requirements will contribute heating effects to both the diode and the FET and these equations provide a conservative bound. Simulation using vendor provided device models may be a more accurate way to predict the increase in loss; however, in order to create a spread sheet approach to analyzing a collection of designs, equations that trend properly are typically adequate (and more convenient).

<u>Example 6.1:</u> Let's assume that we have a FRED whose forward voltage drop is characterized by

$$V_F = 0.05\Omega \times I_{dio} + 0.5V$$

which can be represented by the following circuit diagram

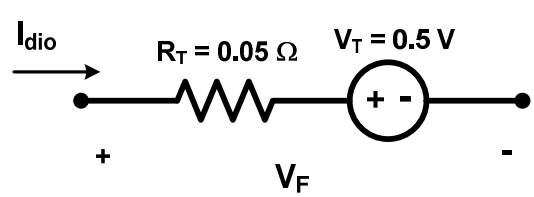

Let's further assume that this diode is operated in a buck chopper stepping down 24V down to 12V and is characterized by the following steady-state current waveforms

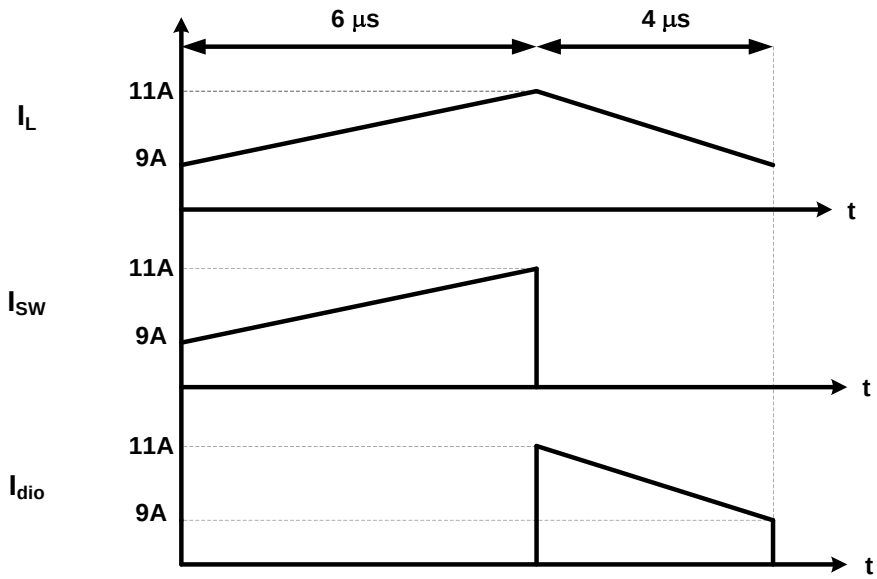

For these conditions, the reverse recovery behavior of the diode is given by

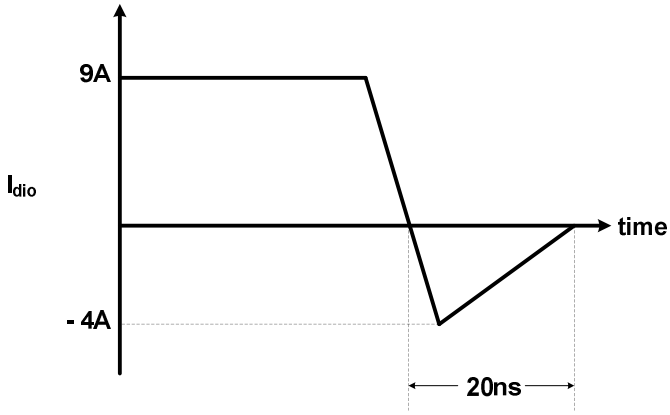

Estimate the conduction and reverse recovery losses of this diode.

OK, the equivalent circuit for the diode will have two conduction loss components: one due to the equivalent resistance heating and one due to the constant voltage source. We will evaluate this two ways so we can convince ourselves that there will be little difference between the two approaches. The average power consumed by our circuit model is given by

$$P_{dio,cond} = I_{D,rms}^2 \times R_T + V_T \times I_{D,ave}$$

As before we can evaluate the rms value of the inductor current via

$$I_{L,rms} = \sqrt{\left(I_{L,ave}\right)^2 + \left(\Delta I_L / \sqrt{12}\right)^2} = \sqrt{\left(10A\right)^2 + \left(2A/\sqrt{12}\right)^2} = 10.017A$$

where the average current (10A) is established readily from the inductor current waveform. With the duty cycle given by $D = 6\mu s/(6\mu s + 4\mu s) = 0.6$, the average diode current and rms diode current are then related by

$$I_{dio,ave} = \left(1 - D\right) I_{L,ave}$$

$$I_{dio,rms} = \sqrt{(1-D)} \times I_{L,rms}$$

If we substitute into our power conduction loss expression, we find

$$P_{dio,cond} = (1-D) \times I_{L,rms}^2 \times R_T + V_T \times (1-D) \times I_{L,ave}$$

Plugging in our values gives

$$P_{dio,cond} = (1-0.6) \times \left(10.017A\right)^2 \times 0.05\Omega + \left(0.5V\right) \times \left(1-0.6\right) \times \left(10A\right) = 4.01W$$

Let's see how this value would change if we first evaluate the average switch drop during conduction

$$V_{F,ave} = I_{L,ave} \times R_T + V_T = 10A \times 0.05\Omega + 0.5V = 1.0V$$

Next, we can evaluate the loss during conduction and weight that by the amount of the cycle that the diode is conducting

$$P_{dio,cond} \approx \left(1-D\right) \times V_{F,ave} \times I_{L,ave} = \left(1-0.6\right) \times 1V \times 10A = 4.0W$$

Essentially the only difference in the two approaches is using $I_{L,ave}$ in place of $I_{L,rms}$ with the resistive term. Since these two currents are quite similar with the inductor ripple current small, they give comparable results!

Finally, the reverse recovery losses can be found by first identifying the reverse recovery charge from the given diode current turn-off plot

$$Q_{rr} = \frac{1}{2} base \times height = \frac{1}{2} \times 20ns \times 4A = 40nC$$

Next, the switching frequency is found from the switching period using the familiar $f_{SW} = 1/T_{SW} = 1/10\mu s = 100kHz$ and finally we evaluate the power loss from (6.5) as

$$P_{dio,rr} \approx \frac{1}{3} V_{IN} Q_{rr} f_{SW} = \frac{1}{3} \times 24V \times 40nC \times 100kHz = 32mW$$

The total average diode losses can then be estimated as

$$P_{dio,ave} = P_{dio,cond} + P_{dio,rr} = 4.01W + 0.032W = 4.042W$$

Here, certainly the conduction losses dominate

We have now reviewed details about the five primary components in a buck chopper: the inductor, capacitor, switch, switch driver, and power diode. We will next need to examine some details of component data sheets before we consider the design of thermal management for our power devices.