Objectives of Section 1

- Define what is meant by an electric motor and generator
- Describe why a generator requires a prime mover
- Define efficiency and explain why an electric machine is not 100% efficient
- Relate efficiency to energy costs
- Make calculations of input power, output power, losses or efficiency
- Understand how torque, angular velocity, and mechanical power are related
- Define horsepower and explain when and why we use those units
- Describe the basic parts of an electric machine

1.0 INTRODUCTION

Our goal in presenting material on electric machines is to not arbitrarily inundate you with physics, formulas, and equivalent circuits, but instead to use such concepts and tools to build a basic knowledge foundation that will help you understand phenomenon that you will see in the fleet and appreciate the rationale for emerging technologies. *Why do we study electric machines?* The question seems naïve when we pause and consider how dependent we are on reliable sources of electricity and the ability to convert that electricity into mechanical work. Simply think of the subway and elevator riders stranded during the August 2003 northeastern blackout or imagine the darkened decks of the USS Cole following the October 2000 attack. As a U.S. Navy or Marine officer, you will help manage and operate complex engineering systems (ships, planes, tanks, submarines) and remote communication networks where reliable electric power generation and utilization may be at the heart of mission success or failure.

As further motivation, the Navy is currently introducing exciting new technologies into the fleet that you will be among the first officers to manage, maintain, and rely upon. The Zumwalt-Class DDX destroyer will be the first surface combatant that will employ an Integrated Power System (IPS) and a power electronics-based *electric propulsion* drive. Meaning, a controlled electric motor will propel the ship through the water versus gas turbines coupled to a propeller via reduction gear. A *hybrid-electric propulsion* system is used on the LHD8 amphibious assault ship that is under construction. An *electromagnetic aircraft launch system* is being proposed for the CVNX carrier. This system requires a linear electric motor, electronics to apply the correct voltages, and an energy storage mechanism that can deliver large amounts of energy over a short period of time. A variation of such a linear motor is also being explored for application on a *rail gun* that could see implementation on a later version of DDX. Other important research efforts include the development of power dense super-conducting machinery for both motoring and generating applications and the consideration of variable-speed drives for shipboard pump, fan, and compressor applications.

The starting point for our inquiry must be some basic definitions. An electric **motor** (vice an internal combustion engine in your car) is a device that converts electrical energy into mechanical work. An electric **generator** converts mechanical work into electricity. A typical power system links these components in a network generically depicted in Figure 1.1. The **prime mover** creates the mechanical work required to drive the electric generator. On board ship, the prime mover might be a gas turbine, steam turbine, or diesel engine. Terrestrially at dams, hydro-turbine prime movers are another important type of power producer. The network interconnecting the generator and motor typically includes cables, switchboards (connection points), transformers, and circuit breakers. The shipboard motor load shown in Figure 1.1 might be an air-conditioning compressor, a gas turbine cooling fan, the anchor windlass, or a chilled-water system pump. Additional shipboard motor loads are recorded in Table 1.1.

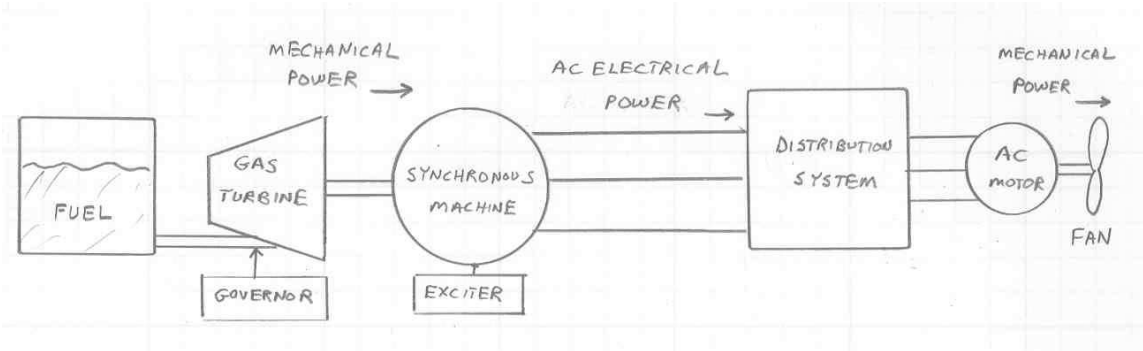

Figure 1.1: Notional Power System Containing a Generator and a Motor

The flow of *real power* through an electric motor is diagramed in Figure 1.2. Note that only a portion of the applied power is available to the mechanical load. There are three loss components associated with the machine: i^2R heating of the windings termed copper losses, hysteresis and eddy-current effects within the iron of the machine termed core losses, and those due to friction and windage (where windage accounts for the displacement of air by the moving part of the motor). Each of these items will be encountered later as we delve into the details of machine operation.

The **efficiency** of the motor is the ratio of the output *real power* to the input *real power*, expressed as a percent.

$$\eta = \frac{P_{OUT}}{P_{IN}} 100$$

Most motors will have efficiencies in the 75 to 90% range for *rated load*. Obviously, if the mechanical load requires no power ($P_{OUT} = 0$), the efficiency is zero. A similar diagram holds for the electric generator. The only difference being that input power is applied to the mechanical terminal and output power is taken from the electrical terminal. As output power gets large (3MW units are common on Arleigh-Burke class destroyers), it is not uncommon to find generator efficiencies in the 98% to 99% range.

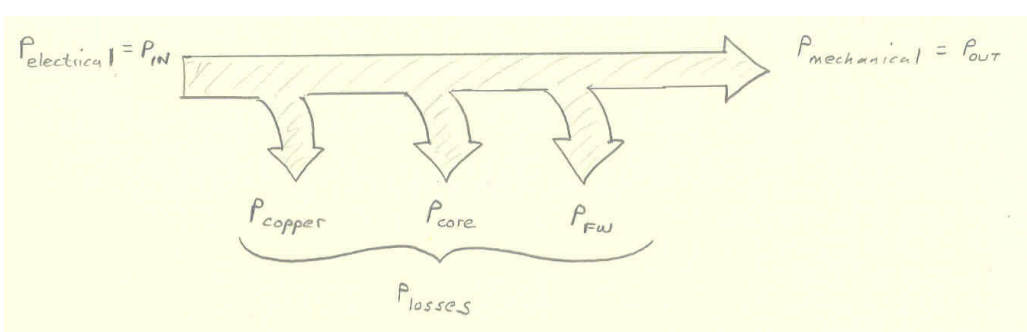

Figure 1.2: Real Power Flow through an Electric Motor

Table 1.1 Representative Shipboard Motor Loads

Application	**Quantity**	**Motor Rating (HP)**
AC Chilled Water Plant Compressor	4	250
Fire Main Pump	6	150
Propulsion Gas Turbine Module Cooling Fan	4	130
Controllable Pitch Propeller Pump	2	125
Steering Gear Hydraulic Power Unit	4	100
AC Chilled Water Pump	4	60
Main Reduction Gear Lubrication Oil Service Pump	4	60
Centralized Seawater Cooling Pump	5	50
Anchor Windlass	1	50
Fixed Capstan	1	40
Ship Service Gas Turbine Module Cooling Fan	3	25
JP-5 Service Pump	1	20
CL W Vent Fan	1	20
CL Z Vent Fan	9	15
Ship Service Gas Turbine Generator Seawater Pump	3	10
Cold Potable Water Pump	2	10
Marine Diesel Oil Fuel Service Pump	4	7.5
VCHT Sewage Ejector Pump	4	7.5
CL Z Vent Fan	2	10
CL W Vent Fan	14	7.5
CL W Vent Fan	32	5
CL Z Vent Fan	9	3
CL W Vent Fan	8	2
CL Z Vent Fan	10	1.25
CL W Vent Fan	7	1
CL Z Vent Fan	3	0.75
CL W Vent Fan	6	0.5
CL W Vent Fan	9	0.25

If you are still unmotivated about studying electric motors, consider the following fact: *over 57% of the power generated in the U.S. is used by motor-driven systems*. What would be the consequence if we could increase the efficiency of these machines or how we operate them by a mere 5%? Let's consider the following exercise.

Example 1.1: Suppose that we have a motor pump system that operates 300 days per year, 24 hours a day, and pumps $1200m^3$ of water per day. Further suppose that if the pressure is maintained constant by mechanical valve control, the system draws 18kW of power. If instead we control the pressure by using a variable-speed drive (adjusting the speed of the motor), the system requires 14kW of power. If the cost of electrical energy is 8 cents/kWh, what would be the energy savings provided by a variable-speed drive?

Solution. Well, we can calculate this by

$$300\frac{days}{year}(18kW - 14kW)\left(24\frac{h}{day}\right)\left(\frac{\$0.08}{kWh}\right) = \$2304/year$$

OK, you say, but doesn't a variable-speed motor drive cost more? Yes, for this application, probably on the order of $7,000. After considering the investment costs of using this money up front (interest rates, inflation, etc.), the payback period is on the order of 4 years. A variable-speed drive will typically last more than 10 years, so it will save you money in the long run.

To this point, we have a basic grasp on what is meant by input electrical power. For a dc system, the input power is simply the product of the terminal dc voltage and current. We will find that for a single-phase ac system, it is the product of the rms voltage and current multiplied by the power factor. For a balanced three-phase ac system, it is $\sqrt{3}$ times the rms line voltage, the rms line current and the power factor. But how do we quantify the output power? A simple example of mechanical work (energy) is a football player pushing a sled in a lineman drill. The lineman applies a force to the sled, first overcoming the frictional resistance presented by the mass, then accelerating the sled over some distance. The instantaneous power delivered to the sled is force times velocity.

$$p(t) = F(t)v(t)$$

The energy is the integral of the power and for constant force and velocity, it is simply power times time (or here, force times distance).

$$W = \int_0^t p(t)dt = \int_0^t F_{const}\frac{dx}{dt}dt = \int_0^x F_{const}dx = F_{const}x$$

For a rotating system, we simply replace force by **torque** and linear velocity by **angular velocity**. Whereas force is the lineman "pushing" the sled, think of torque as you "twisting" a doorknob or spinning a bicycle wheel. If we express torque (T) in Newton-

meters (versus English units of foot-pounds) and angular velocity (ω) in radians/second, the product will give us watts.

$$P = T\omega$$

Since a watt is a small unit for many motor applications, we introduce the horsepower. One **horsepower** (HP) is equal to 746 W (half a Columbus!). Further, speed is typically given in revolutions-per-minute (rpm) versus radians/sec (probably because our mind can visualize a revolution easier than the distance of 1 radian!). Here the conversion uses the fact that there are 2π radians in one revolution and 60 seconds in a minute so that

$$N_{rpm} = \omega_{rad/s}\left(\frac{1rpm}{2\pi rad}\right)\left(\frac{60\sec}{1\min}\right) = \omega_{rad/\sec}\frac{30}{\pi}$$

Thus, a 5HP motor delivering rated power at a speed of 1800rpm produces a torque of

$$T = \frac{P}{\omega} = \frac{5HP(746W/HP)}{1800\left(\frac{\pi}{30}\right)} = 19.79N - m$$

Similarly, a 5HP motor delivering rated power at a rated speed of 900rpm must deliver 39.58N-m of torque. This somewhat simplistic algebra exercise has a point that we will explore in more detail soon: the size of the machine will be intimately related to how much torque it must produce at rated conditions (this is a key technical driver in the design of a multi-megawatt shipboard propulsion motor where very low speeds and thus large torques are required!).

Example 1.2: DDX will require a propulsion motor per shaft that can deliver about 43kHP at a rotational speed of 150rpm. If the motor is 95% efficient, determine the input electrical power, the motor losses, and the torque (all at rated power and speed).

Solution. We can first calculate the mechanical power out of the motor

$$P_{OUT} = 43{,}000HP \times 746\frac{W}{HP} = 32.078MW$$

The required input power can be found from the efficiency via

$$\eta = 95 = \frac{P_{OUT}}{P_{IN}}100 = \frac{32.078MW}{P_{IN}}100$$

which gives $P_{IN} = 33.766MW$. The machine losses are the difference between the input and output power so

$$P_{Loss} = P_{IN} - P_{OUT} = 33.766MW - 32.078MW = 1.688MW$$

Note, these losses show up as heat that must be removed. One way is to liquid cool the machine (circulate seawater through the motor to help conductively cool it). We desire for the motor to be both compact and highly efficient. The more compact we make the machine(less surface area), the more challenging it is to cool. The rated torque that is produced is computed as follows

$$T = \frac{P}{\omega} = \frac{32.078MW}{150\left(\frac{\pi}{30}\right)} = 2.042 \times 10^6 N - m$$

There are numerous ways that we can classify electric motors and generators, with a mind-numbing array of variations and subcategories (superconducting homopolar and transverse-flux permanent magnet are among my favorites!). We want to keep it relatively simple by concentrating on the most basic types. If the magnetic field is stationary, we have a **dc machine** (and it requires dc voltages). If the magnetic field rotates, we have an **ac machine** (and it requires ac voltages). There are two types of ac machines that we can study: **synchronous machines** and **induction machines**. Due to limited time, we will focus on AC synchronous machines since they dominate the power generation arena. Thus, DC and AC synchronous machines are what we want to learn about. OK, we have impolitely re-introduced the concept of magnetic fields which you may have recalled hearing about in some physics course and you have no doubt experienced in playing with refrigerator magnets. Understanding something about magnetic fields is at the core of understanding how electric machines operate.

Our two candidate electric machines share a few more common terms that we will find helpful in the following discussion. Most machines (note, not all) will consist of a chunk of iron at the outside of the machine that is stationary, called the **stator**. The part of the machine that rotates, the **rotor**, is mounted on a shaft running through the center of the machine and is supported by bearings as shown in Figure 1.3. An important (because important things are going to happen there) air gap separates the two structures. Sometimes this air gap is uniform between the rotor and stator; sometimes it is purposefully not (termed **salient**). Most machines (again, not all) will have windings on both the stator and the rotor (some will employ **permanent magnets** instead). The terms **field winding** and **armature winding** will be used depending on the purpose of the conductor, sometimes the field is on the rotor (synchronous machines) and sometimes it is on the stator (dc machines). The key will be to remember the purpose of the field winding rather than simply memorize its machine affiliation.

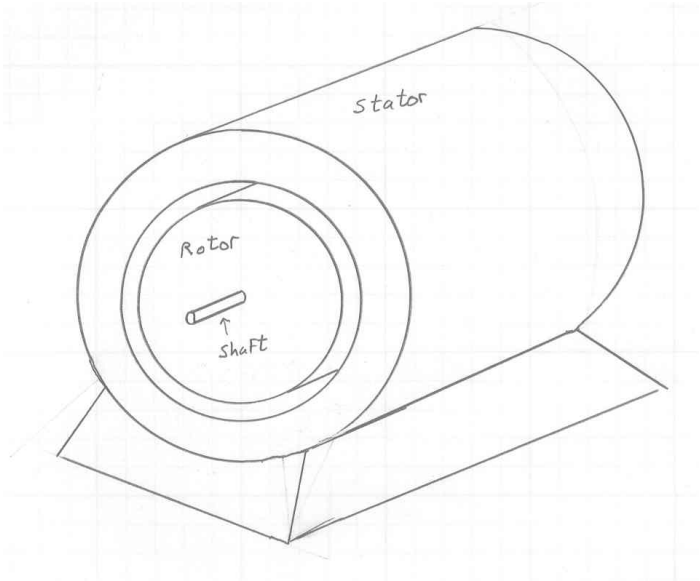

Figure 1.3: Layout of Typical Rotating Machine