Name:_____

EE322 Final Exam Review Worksheet
(Use additional paper as necessary)

1. (Laplace Transform) Find the poles and zeros of a system with transfer function given by:

$$H(s) = \frac{\left(s^2 - 2s - 3\right)}{\left(s+3\right)\left(s-5\right)}.$$

   a. Plot the ROC if this represents a <u>causal</u> system. Does the continuous-time Fourier transform exist for the causal system? Why or why not? Is this system stable? Why or why not?

   b. Plot the ROC if this is a <u>noncausal</u> system. Does the continuous-time Fourier transform exist for the noncausal system? Why or why not?

2. (Sampling) Suppose you wish to sample the analog signal $x(t) = 750\ \mathrm{sinc}^2(750t)$. What is the Nyquist rate? Sketch the frequency spectrum if this signal is sampled with the impulse train function: $0.001\ \delta_{1/2000}(t)$.

3. (MATLAB) Given the following MATLAB code, when the code is run, what is displayed? Be specific (e.g., if there is an error, state what it is; if there is a plot, sketch the plot; if values are displayed in the command window, describe them).

```
t=0:1:5;
x=t.^t;
x=x-10;
x(3)
x(5)
figure(1), plot(t,x)
xlabel('time (sec)'), ylabel('Volts (V)')
title('Worksheet, Problem 3')
```

4. (Fourier Transform) Find the inverse CTFT (i.e., the time signal $x(t)$) corresponding to:

a. $X(f) = \dfrac{3}{\left(2 + j2\pi f\right)^2}$.

b. $X(f) = \dfrac{3}{\left(2 + j2\pi f\right)^2} e^{-j4\pi f}$.

5. (Fourier Transform) If $x(t) = \dfrac{4e^{-4t} - 2e^{-2t}}{2} u\left(t\right)$, find the CTFT of :

a. $\dfrac{d}{dt} x\left(t\right)$

b. $x(t-3)$

6. (System Properties) Find the impulse response of the system defined by the difference equation: $y[n] = x[n+2] - x[n-1] + 3x[n] + 0.5x[n-10]$.

7. (System Properties) Demonstrate whether the system $y[n] = \frac{1}{n}x[n]$ is time-invariant or not.

8. (Laplace Transform) A system has the transfer function $H(s) = \dfrac{s(s+3)}{s^4 - 3s^2 + 1}$. Draw a block diagram for the system using integrators, and find the differential equation that relates the input $x(t)$ to the output $y(t)$.

9. (System Properties) Is the system $y(t) = \int_{-\infty}^{t} x(t)dt$ causal? Why or why not? BIBO stable? Why or why not?

10. (Signals) Evaluate: $\int_{-33}^{80} 6\delta(t+2)\,dt$.

11. (Continuous Convolution) Plot the result of convolving the continuous functions below.

$$rect\left(\frac{t}{4}\right) * rect\left(\frac{t}{6}\right).$$

12. (Discrete Convolution) Find the discrete convolution of x[n] and y[n], where

$$x[n] = -\delta[n+1] + \delta[n] \text{ and } y[n] = \delta[n+1] + 2\delta[n] + \delta[n-1].$$

13. (Frequency response) A system is shown below. Sketch the Bode magnitude of the frequency response. Label your corner frequencies and slopes. What kind of filter is this?

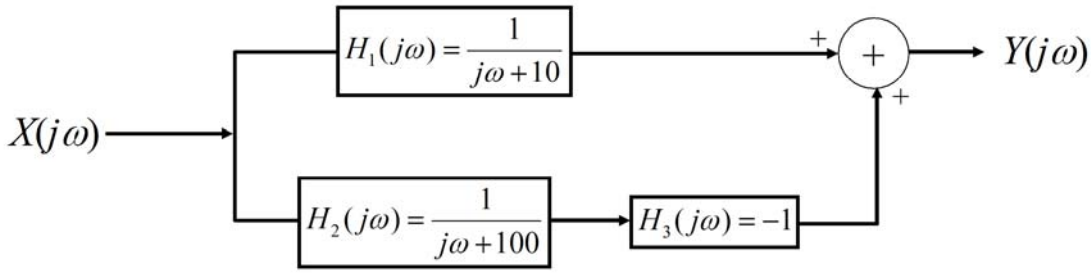

14. (Signals) Plot $ramp\left[\frac{n}{3}\right]$.

15. A system is shown below, where the input is $i_s(t)$ and the output is $v_o(t)$. Use the following values for components:

$R_1 = 100\ k\Omega$
$R_2 = 10\ k\Omega$
$C_1 = 10\ \mu F$
$C_2 = 1\ \mu F$

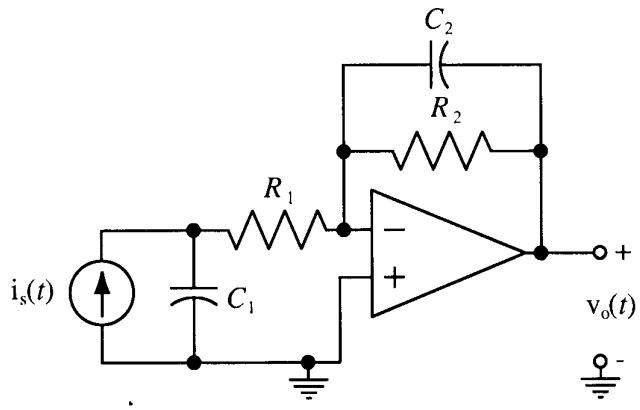

a. Determine the system's transfer function (H(s)).

b. What type of filter is this (HPF, LPF, etc) ?

c. Determine the system's impulse response, $h(t)$.

Use additional paper as needed.