DLPF-1569-7

Dual Tunable Low-Pass Filter

(Board Revision B)

Educational DSP, LLC
www.educationaldsp.com

1 Hardware 2
1.1 General Precautions 2
1.2 Audio Connections 2
1.3 Power Control 2
1.4 Filter Operation 2
2 Schematic Diagram 3
3 Board Layout 5

1 Hardware

The DLPF-1569-7 is a two-channel stereo low pass filter based on the Linear Technology LTC1569-7 filter device. It operates on three (3) AA alkaline or rechargeable batteries. A 3V regulator powers the audio section, with a power control circuit implementing automatic shut-off and reversed battery protection. An LED indicator indicates when the unit is powered up, and also shows when battery replacement is required. A buffer amplifier protects the filters from loading effects and provides increased output drive capability.

1.1 General Precautions

Due to its exposed circuitry, proper electrostatic discharge (ESD) precautions should be observed at all times when handling the DLPF-1569-7. Failure to do so may result in damage to the unit.

1.2 Audio Connections

The audio connectors on the DSK_AUDIO4 daughtercard are design to accept standard 3.5mm (1/8”) stereo mini-plugs. When inserting plugs into the audio connectors, it is advisable to use your finger to maintain pressure on the rear of the connector housing to prevent stressing the connectors.

1.3 Power Control

When batteries are first installed, the unit may or may not automatically power up, depending on its last state and how long power was removed. To turn power on, quickly press and release the power button. The power LED will come on for 1 second, and then start flashing approximately once per second. To turn power off, press and hold the power button until the LED goes out, and then release the power button. If left on, the unit will automatically power down after 45 minutes. The power-down delay can be restarted at any time by quickly pressing and releasing the power button.

Low batteries are indicated by a faster flash rate on the LED. This indication is displayed when the output of the voltage regulator drops to approximately 2.85V.

1.4 Filter Operation

A three-position slide in the center of the board is used to select the frequency range for the filters. The right-center-left positions of the switch set the filters maximum cut-off frequency (fc_{max}) to 8kHz, 32kHz, and 128kHz, respectively. The left and right channels have a separate potentiometer for adjusting the respective filter’s cutoff frequency. Turning the potentiometers clockwise increases the filter cutoff frequency.

2 Schematic Diagram

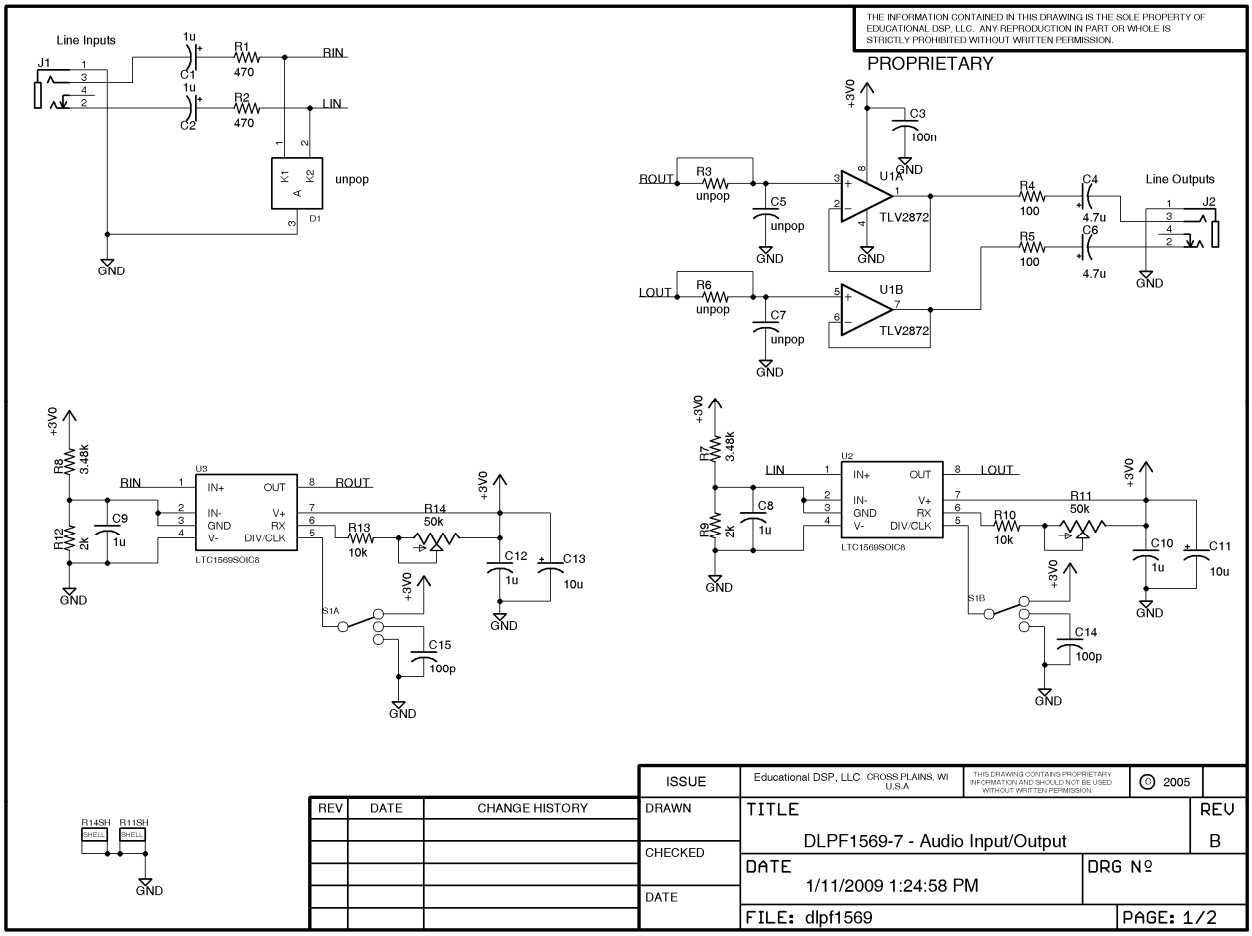

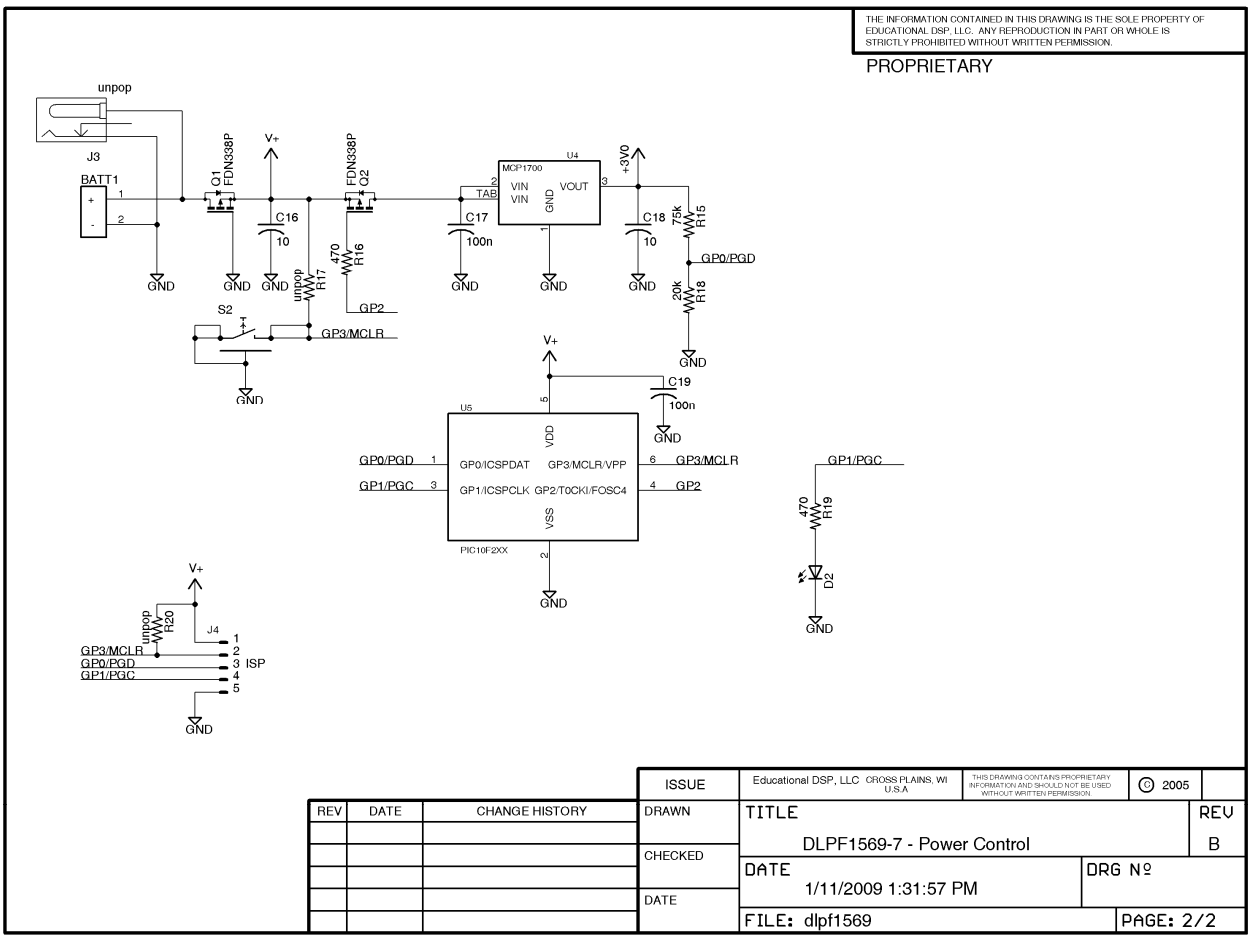
THE INFORMATION CONTAINED IN THIS DRAWING IS THE SOLE PROPERTY OF EDUCATIONAL DSP, LLC. ANY REPRODUCTION IN PART OR WHOLE IS STRICTLY PROHIBITED WITHOUT WRITTEN PERMISSION.
PROPRIETARY
unpop
J3
BATT1
Q1 FDN338P
V+
FDN338P Q2
C16 10
470 R16
unpop R17
GP2
GP3/MCLR
S2
GND
MCP1700
U4
VIN VIN GND VOUT
TAB
C17 100n
+3V0
C18 10
75k R15
GP0/PGD
20k R18
C19 100n
U5
VDD
GP0/PGD
GP0/ICSPDAT
GP3/MCLR/VPP
GP1/PGC
GP1/ICSPCLK
GP2/T0CKI/FOSC4
VSS
PIC10F2XX
GP1/PGC
470 R19
D2
unpop R20
J4
GP3/MCLR
GP0/PGD
GP1/PGC
ISP
ISSUE
Educational DSP, LLC CROSS PLAINS, WI U.S.A.
THIS DRAWING CONTAINS PROPRIETARY INFORMATION AND SHOULD NOT BE USED WITHOUT WRITTEN PERMISSION.
© 2005
REV DATE CHANGE HISTORY
DRAWN
CHECKED
DATE
TITLE
DLPF1569-7 - Power Control
REV
B
DATE
1/11/2009 1:31:57 PM
DRG Nº
FILE: dlpf1569
PAGE: 2/2
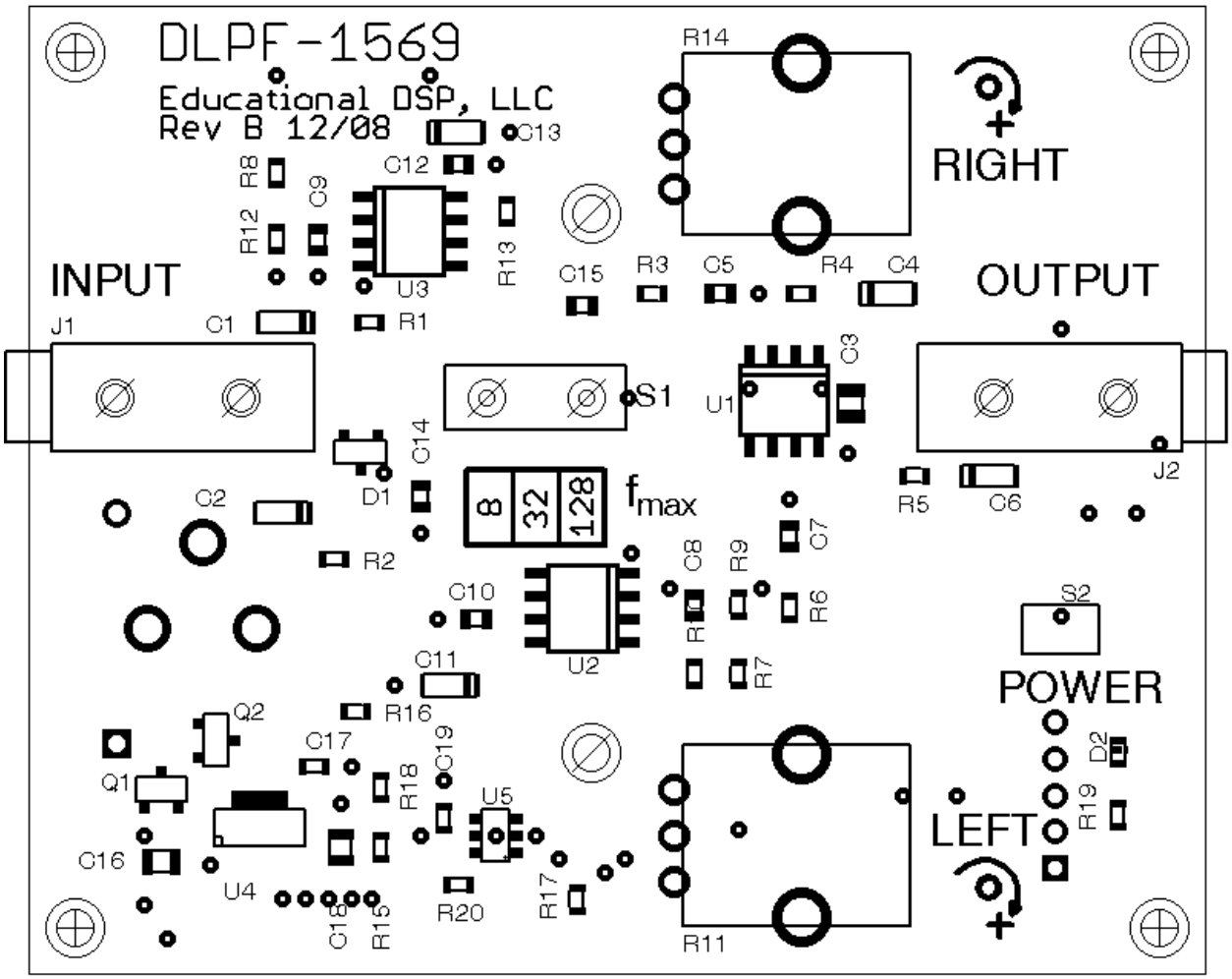
3 Board Layout