Q. What is the maximum current that a $\frac{1}{2}W$, 100Ω resistor can carry?

Q Suppose you must dissipate 10W and require 100Ω of resistance, but you only have 2W resistors. Suggest the minimal part solution

Q. A 6V battery is rated for 7Ah, what resistance must be attached across it for the battery to last 5hrs ?

Q How many nodes are in the following circuit

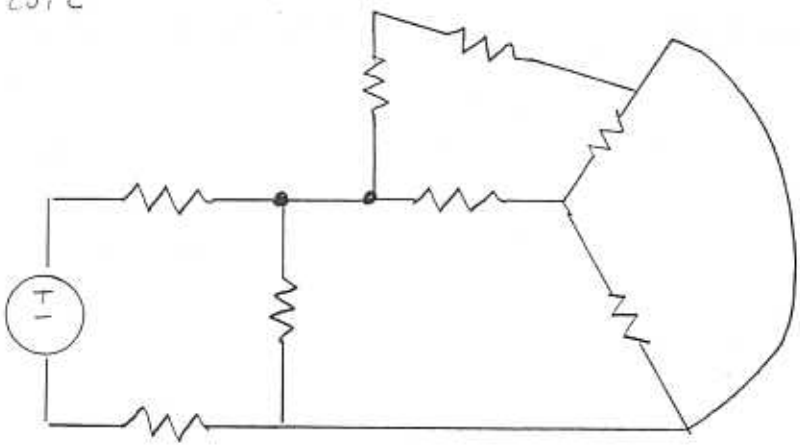

Q what value of R will cause the 2Ω resistor to absorb 1W

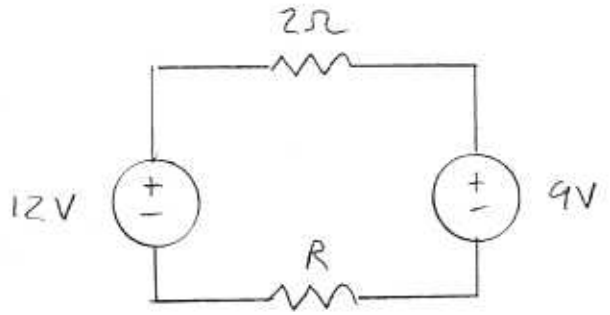

Q.

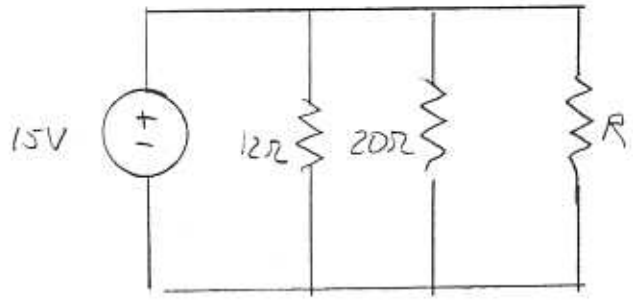

What R is required to have the supply source no more than 4A? What power does 12Ω absorb?

Q. If you have a 12V battery and a bulb rated for 5V at 0.1A, what series resistance is required and at what standard wattage ($\frac{1}{8}$W, $\frac{1}{4}$W, $\frac{1}{2}$W, 1W, 2W)

TOPS 35500

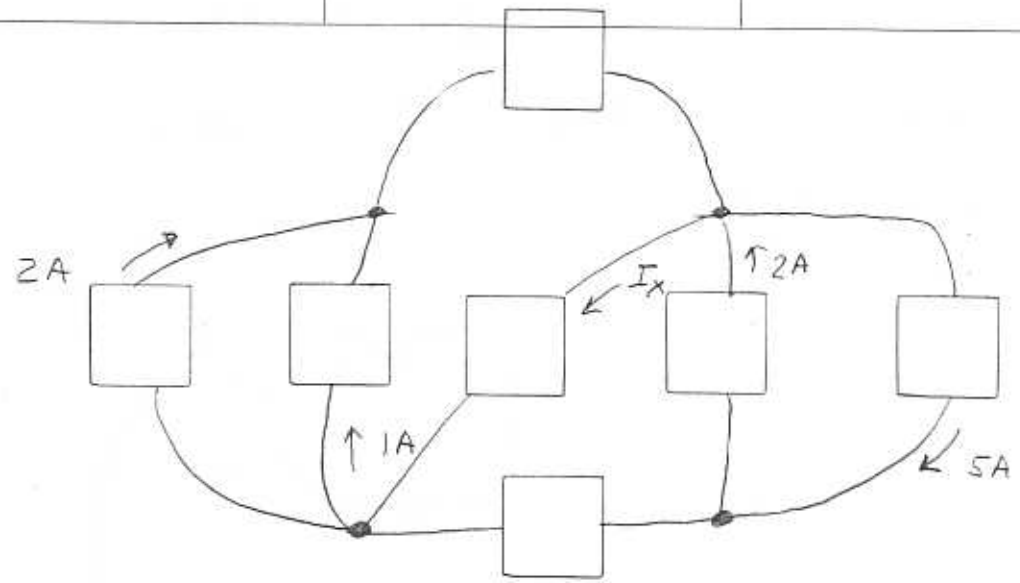

Q. Find I_x

Q. Find the power absorbed by component 1

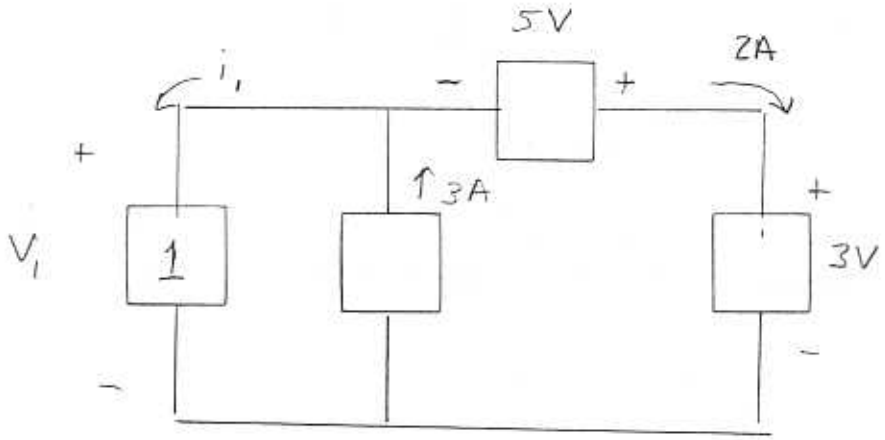

Q. Find the equivalent resistance "seen" by the 12V source

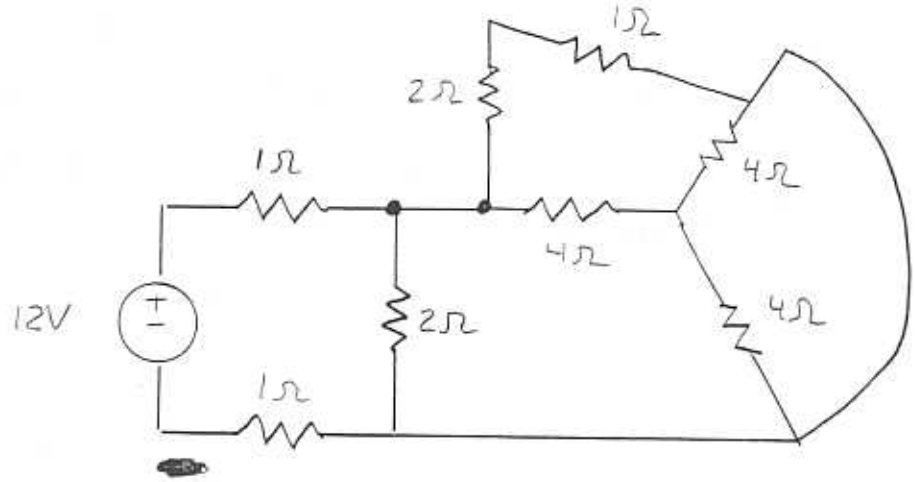

Q. Find R so that $I_R = 4A$

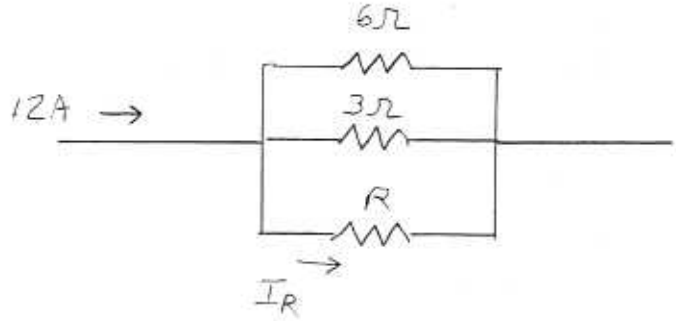

Q. Consider ideal voltmeter and ammeter, what does each meter read?

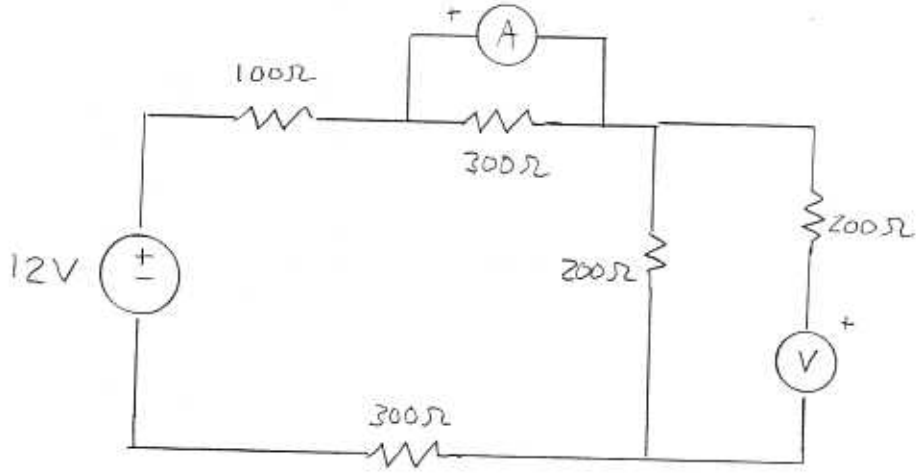

Q. If the ammeter has an internal resistance of 10Ω and the voltmeter is ideal, what does the voltmeter read?

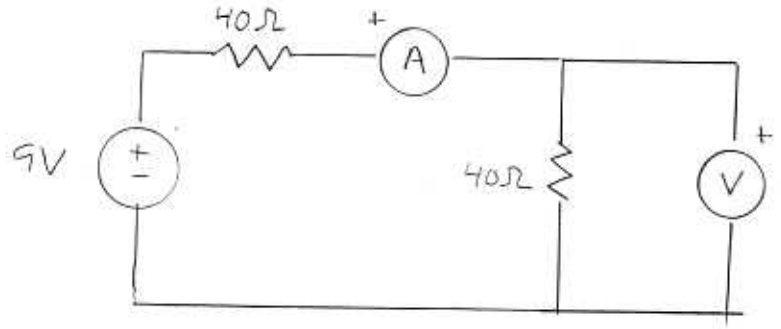

Q.

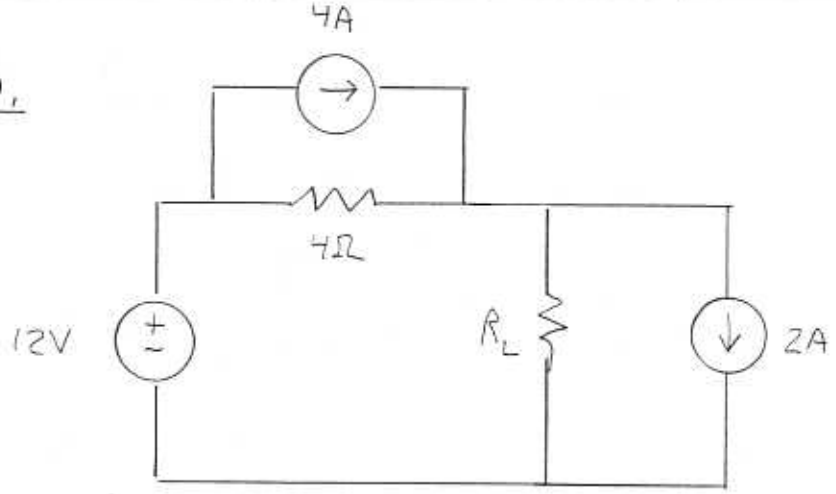

Find the Thevenin Equivalent "seen" by R_L

Q. Determine node voltages V_1 and V_2

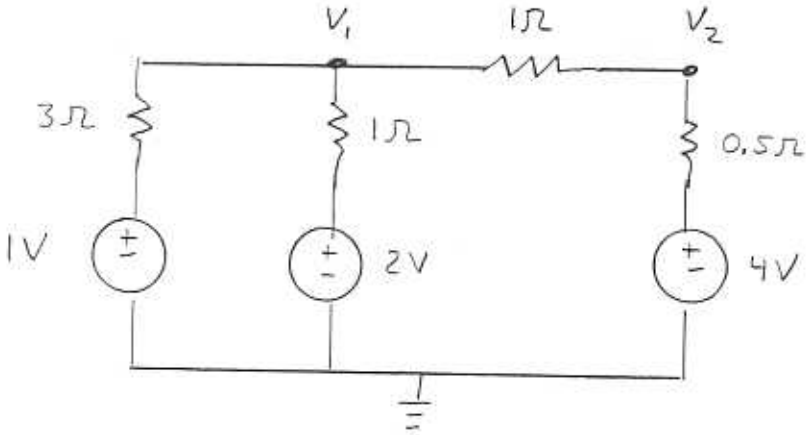

Find i_1 and i_2

Q.

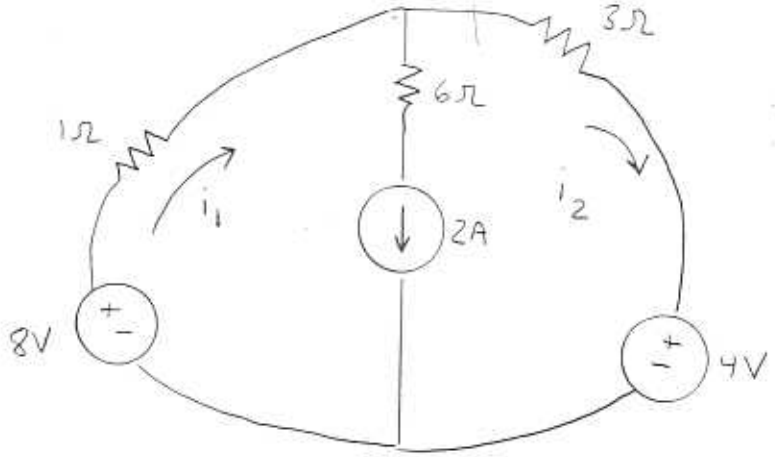

Q. Find the power delivered by the 1V source

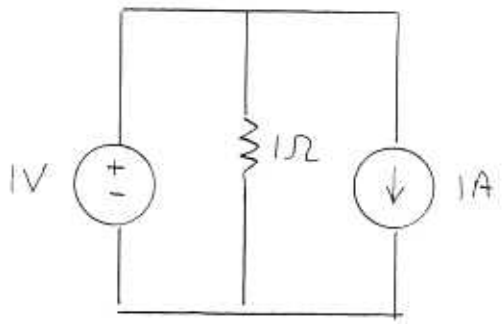

Q. Find the Thevenin Equivalent at ab

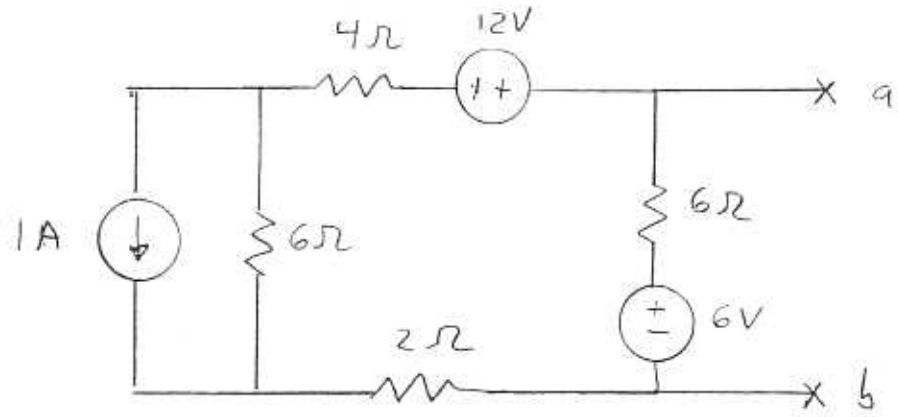

Q. If R_L is chosen to give maximum power transfer, what is the maximum power transferred?

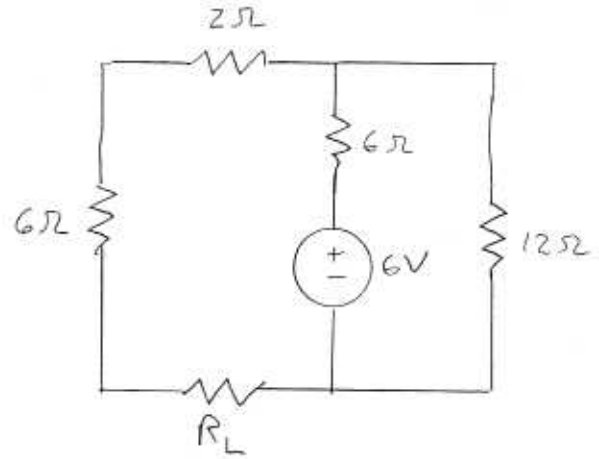

Q. Find R_L for max power transfer and find the max power.

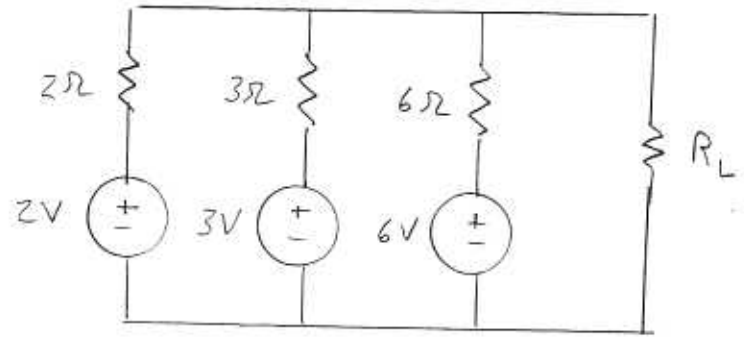

Q. Given the following, Find V_{IN}, R_F and I_{OP}

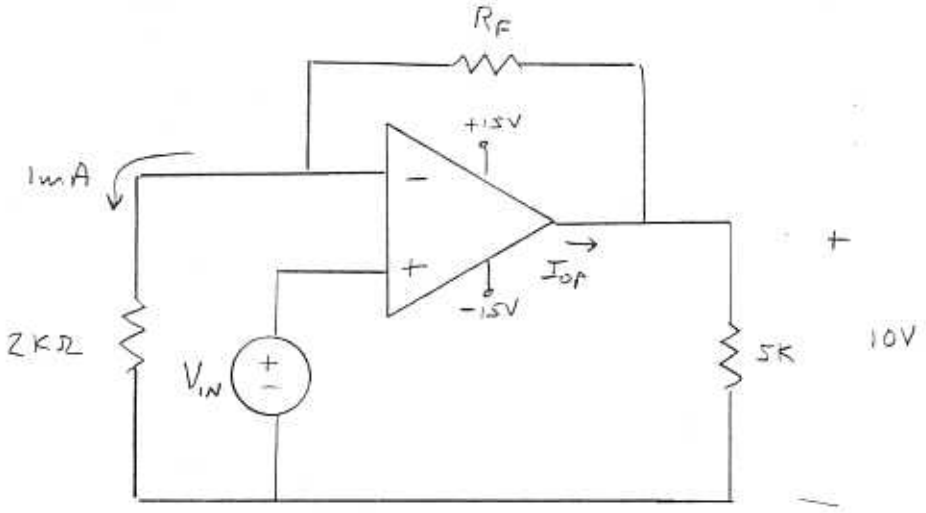

Q Find V_{OUT} and I_{op}

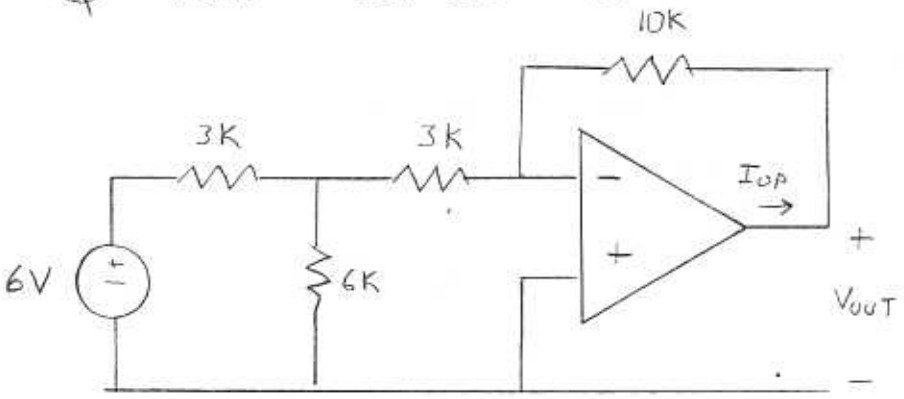
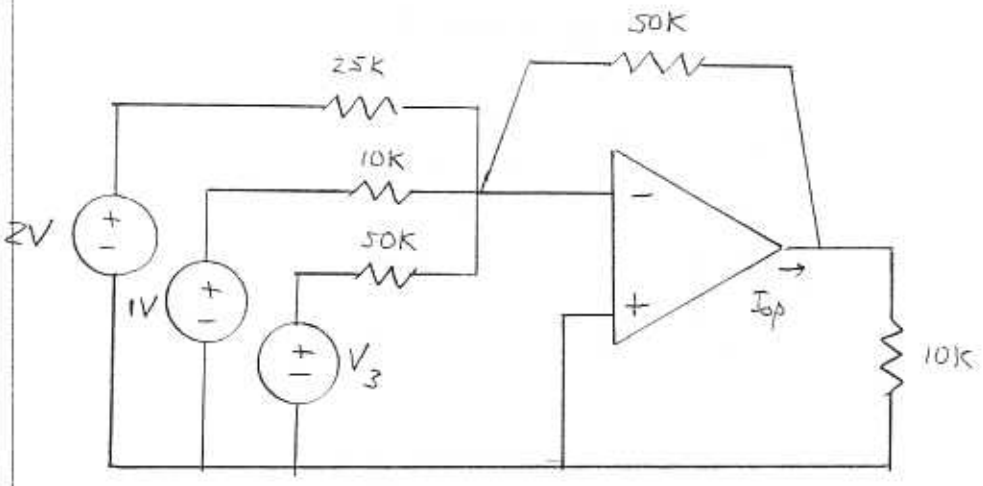
Q. Find V_3 so $I_{op} = -0.72\,mA$