PRACTICAL EXERCISE #20

“THREE-PHASE CIRCUITS”

EE331

Fall 2012

Name: _____ Section: _____ Date: _____

Background: In today's exercise, we will build some three-phase circuits and take some measurements. WE WILL BE USING LETHAL VOLTAGES SO BE CAREFUL TO READ ALL DIRECTIONS AND MAKE SURE TO NOT MAKE ANY CIRCUIT CONNECTIONS WITH POWER APPLIED! WHERE DIRECTED, MAKE SURE TO HAVE THE INSTRUCTOR OR LAB TECH VERIFY YOUR CIRCUIT!

We will be using the variable voltage amplitude 3-phase signal panel on the lower right part of the power panel (labeled A, B, C). In general the source could be ABC-sequence or ACB-sequence. We should be able to assess the sequence by placing the line-to-neutral voltage V_{AN} on channel 1 of the scope and the voltage V_{BN} on channel 2. If V_{AN} leads V_{BN}, we have an ABC-sequence (A-B-C-A-B-C). If V_{BN} leads V_{AN}, then we have an ACB-sequence (A-C-B-A-C-B).

<u>Step 1:</u> Determine the phase sequence of the source

1. Ensure that the variable voltage control is turned down to zero.
2. Ensure that the MAIN AC breaker and the VARIABLE OUTPUT breaker are both open (off).
3. Connect terminals A and N to the DMM (set to AC voltage).
4. Close the MAIN AC breaker and the VARIABLE OUTPUT breaker.
5. Adjust the variable voltage control knob until the DMM reads 15Vrms (this should be between 0 and 1 on the dial).
6. Open the MAIN AC breaker.
7. Connect terminals A and N to CH1 of the oscope. Connect terminal B to CH2 of the oscope.
8. Close the MAIN AC breaker.
9. Obtain a stable oscope display with both signals centered. Make sure that PROBE for CH2 is set to volts and to a 1:1 scale factor.
10. Determine which channel leads which and by how much (note, the signals are 60Hz).

V_{AN} (LEADS, LAGS) V_{BN} by _____ degrees

Thus we have an (ABC, ACB) sequence (circle one).

11. *Open the MAIN AC breaker*.
12. *Return the variable voltage control knob to zero.*
13. Disconnect the connection cabling.

Step 2: Analyzing Y-Connected Circuits

1. Suppose we have a balanced Y-connected load. If the line voltage of the source measures 60Vrms, $R_L = 666\,\Omega$, and you choose $\tilde{V}_{AN}$ as your reference phasor, identify the balanced set of line-to-neutral voltages (polar notation):

$\tilde{V}_{AN} =$ _____ $\tilde{V}_{BN} =$ _____ $\tilde{V}_{CN} =$ _____

2. Compute the line current $\tilde{I}_A$.

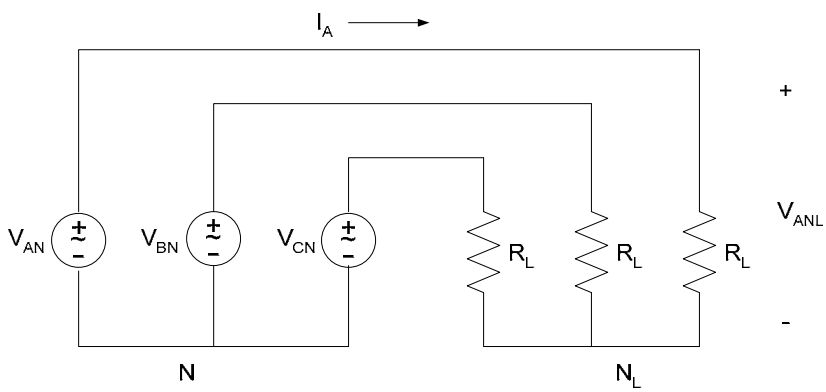

Figure 1: Y-Connected Load

3. If you placed a short circuit between the two neutral points N and N_L, would the line current change?: (YES or NO)

<u>Step 3:</u> Verifying the calculation.

1. We will be using the variable resistor module found at the top of your station, shown below in Figure 2.
2. The switches above the resistors enable us to change the three resistances (labeled A, B, and C): each switch connects $2k\Omega$ in parallel in each resistor (the switch up means the resistor is placed into the circuit). Using the DMM, measure the resistance with one, three and five switches in the up position.

$R_{1up} =$ _____

$R_{123up} =$ _____

$R_{12345up}$ = _____

3. With power ***de-energized***, connect up the circuit shown in Figure 3. Note, one DMM is used to measured line current, one DMM is used to measure the line-to-neutral output voltage, and the third meter is the analog AC voltmeter at the top of your station. This meter should be set to the 150V full-scale reading (lower scale reading). Set the load resistance module so that it is as close to $R_L = 666\Omega$ as possible.

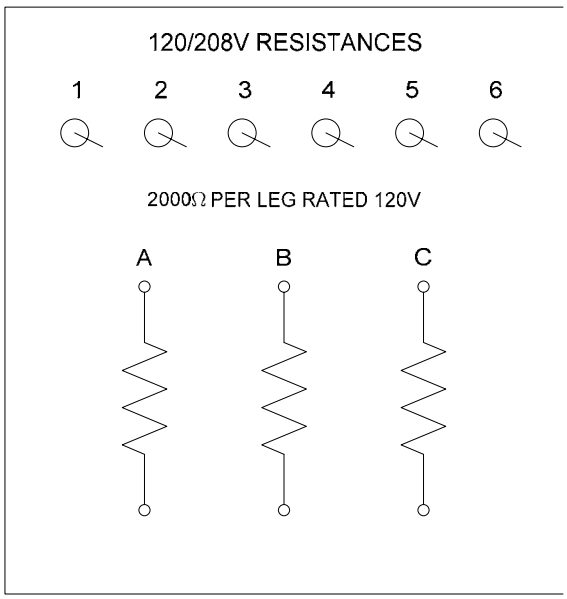

Figure 2: Variable Resistance Module

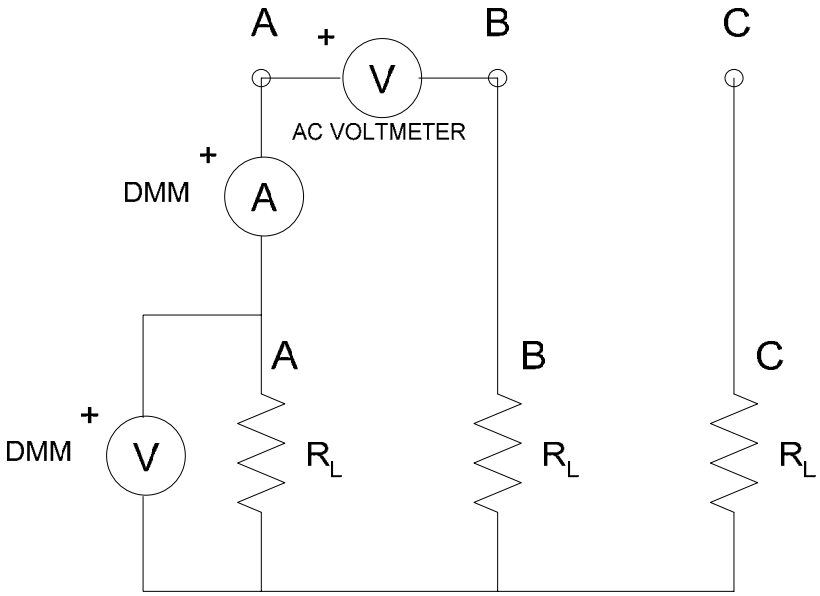

Figure 3: Y-Connected Load

4. **<u>Have the lab tech or instructor verify your setup</u>**: _____
5. Close the AC MAIN breaker.
6. Adjust the variable voltage control knob until the AC Voltmeter reads 60Vrms (this should require the knob to be between 2 and 3). If you get to 3 and you do not believe that you have 60Vrms, contact the instructor or lab tech. *DO NOT go beyond 3 on the variable voltage control knob.*
7. Measure the line current and line-to-neutral voltage magnitudes:

$$\left|\tilde{I}_A\right| = _____ \qquad \left|\tilde{V}_{AN}\right| = _____$$

8. How do these compare with your theoretical values?

9. Open the AC MAIN breaker.
10. Insert a connection cable between the neutral of the source (N) and the neutral of the load (N_L).
11. Close the AC MAIN breaker.
12. Measure the line current and line-to-neutral voltage values

$$\left|\tilde{I}_A\right| = _____ \qquad \left|\tilde{V}_{AN}\right| = _____$$

13. Has the neutral connection changed them? (YES, NO)
14. Open the AC MAIN breaker.
15. Dial the variable voltage control knob down to zero.

<u>Step 4:</u> Creating an Equivalent Δ Load

1. Consider the delta-connected load illustrated in Figure 4. Determine the value of R_L that will result in the same line current magnitude $\left|\tilde{I}_A\right|$ as in Steps 2 and 3 (assume the same source voltage settings).

$$R_L = _____$$

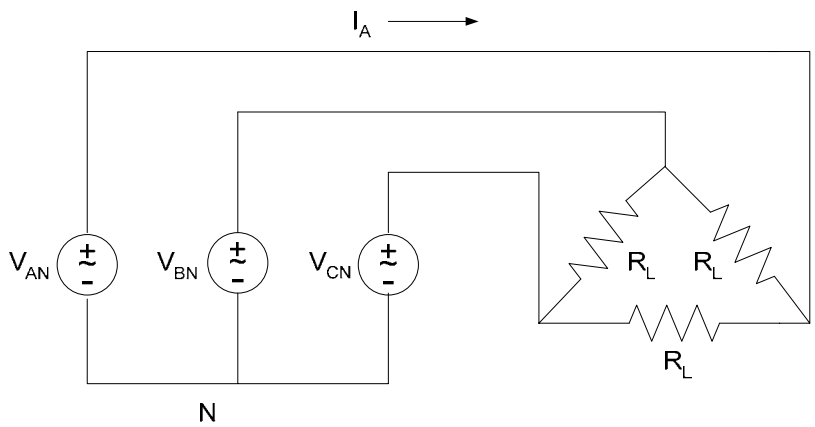

Figure 4: Delta-Connected Load

<u>Step 5:</u> Verifying the Delta-Load

1. Build the following circuit. Set the resistance module to the value found in Step 4. Note that one DMM is measuring line current, the other is measuring the line voltage of the load, and the analog AC voltmeter is measuring the source line voltage.

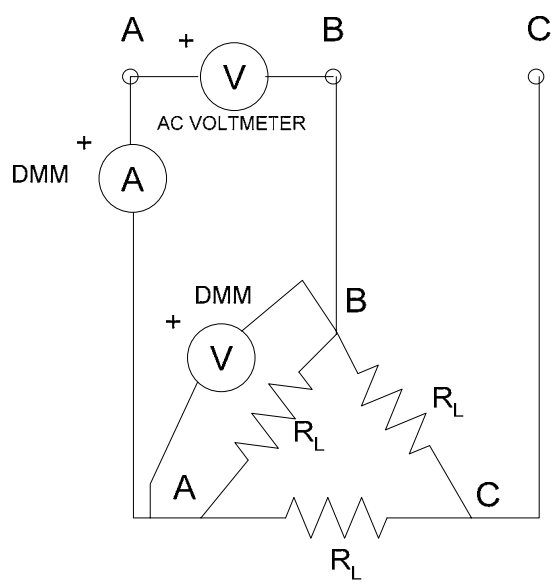

Figure 5: Delta-Connected Load

2. **<u>Have the instructor or lab tech verify your connections</u>**: _____

3. Close the AC MAIN breaker.
4. Adjust the variable voltage control knob until the AC voltmeter reads 60Vrms (once again the knob should be set somewhere between 2 and 3).
5. Record the measured line current and line voltage.

$\left|\tilde{I}_A\right| =$ _____ $\left|\tilde{V}_{AB}\right| =$ _____

6. Do these values match your theoretical calculation and what you anticipated?

7. Dial the variable voltage control knob down to zero.
8. Open the AC MAIN breaker and the VARIABLE OUTPUT breaker.
9. Disconnect all connection cabling and return components to their original location.

Step 6: Compute the real power delivered to the load for both the Y-connection (step 3) and the delta connection (step 5). (These should come out pretty close to equal)