EE 342 LAB 6 VOLTAGE-SAMPLED CURRENT SUM FEEDBACK AMPLIFIER

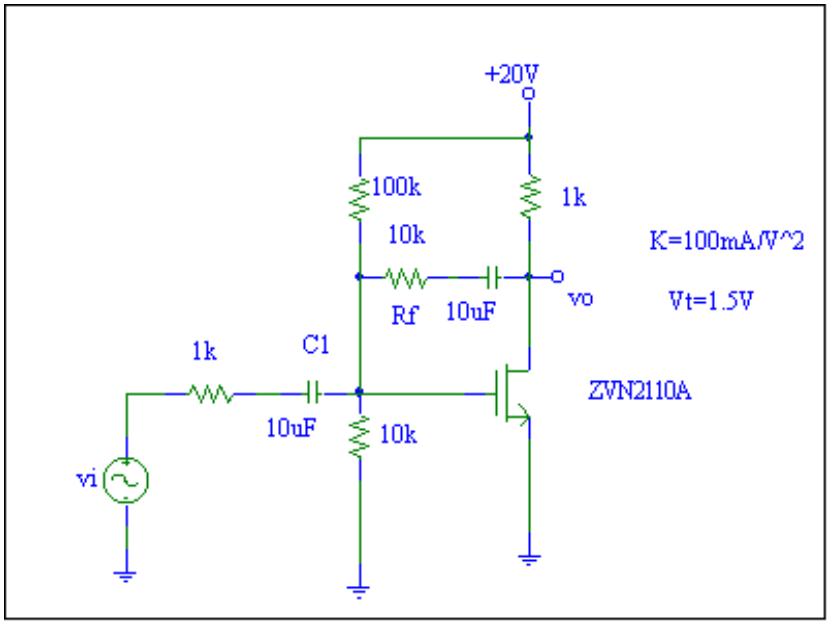

1. Calculate V_D, Aβ- loop gain, and vo/vi.

2. Repeat if the feedback resistor (Rf) is increased to 15KΩ.