EE354 Homework #6

1. A 100 MHz carrier is frequency modulated by a sinusoidal signal that has a frequency of 75 kHz. The FM transmission has a frequency deviation of 500 kHz. Determine the bandwidth and range of frequencies occupied by the FM transmission.

2. An information signal $m(t) = 3\cos\left(2\pi\left(4.0\,kHz\right)t\right)$ is input to an FM modulator having a VCO with free-running frequency of 10 MHz and VCO constant of 10.0 kHz/Volt. Determine:

   (a) The FM Modulation Index
   (b) The Bandwidth of the FM signal
   (c) The frequency of the second order lower sideband
   (d) ** The output of the VCO is multiplied by a sinusoidal carrier with a frequency of 70 MHz, and the product of this signal is then filtered with a Bandpass Filter. Find the center frequency of this filter.

3. An FM signal is broadcast on 197.75 MHz, and a superheterodyne receiver is used to downconvert and demodulate the transmission. The IF frequency is 45.75 MHz, the baseband modulating signal has a maximum frequency of 15 kHz, and the FM Frequency Spectrum extends to a maximum of 197.9 MHz. Determine:

   (e) The superheterodyne receiver's Local Oscillator Frequency
   (f) The corresponding Image Frequency
   (g) The FM Modulation Index

4. The following is a block diagram of a double-conversion superheterodyne receiver designed to demodulate signals between 135 MHz and 136 MHz. The signals of interest have a 100 kHz bandwidth. Determine:
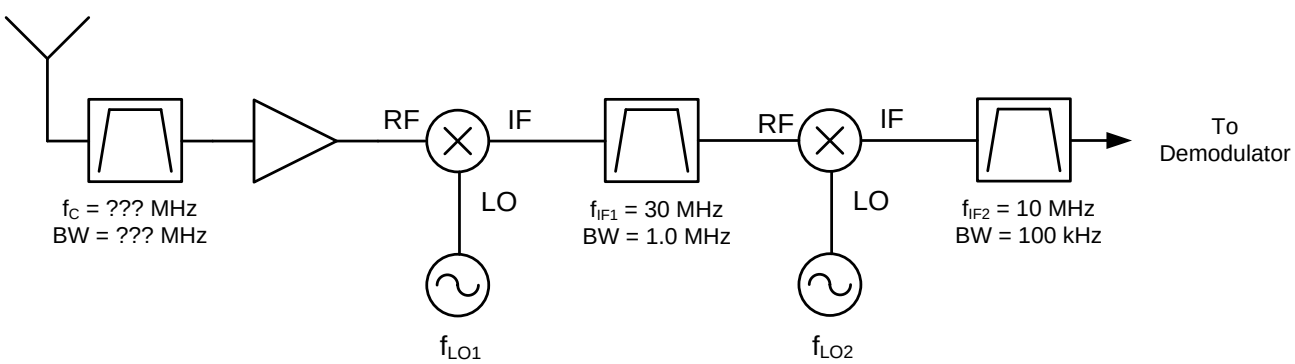
   (a) Range of frequencies for the Local Oscillators
   (b) All possible image frequencies
   (c) Design a filter (Q<10) to remove the image frequencies.