Name: _____

EE354 Spring 2012 Lab 2: Fourier Series and Transforms in Hardware

In this lab you will create and analyze the frequency content of several signals, then see how well the theory follows real life. You will use a function generator to create the signals, an oscilloscope and a spectrum analyzer to analyze the true spectrums.

Pre-Lab: Theory

Using the Fourier Series table in Appendix I (attached at the end of this lab), determine the **normalized magnitude** of the Fourier series coefficients a_n *or* b_n for each of the following three signals by filling in the tables below (Hint: a "for loop" in Matlab would be an excellent way to do this quickly) . Normalize the values to the magnitude of the $\mathbf{a_1}$ **or** $\mathbf{b_1}$ coefficient. Normally, we would normalize to the a_0 term, but since the spectrum analyzer only can analyze > 9 kHz, we will normalize to the n = 1 term instead.

Signal 1: A 1.0 MHz square wave that ranges from -0.5 Volt to +0.5 Volt.
Signal 2: A 150 kHz sawtooth wave that ranges from 0 Volt to +1 Volt.
Signal 3: A 200 kHz triangular wave that ranges from 0 Volt to +2 Volts.

Square Wave—Theoretical Results			
n	**Associated Frequency**	**$\lvert a_n \rvert$**	**Normalized Magnitude** $\frac{\lvert a_n \rvert}{\lvert a_1 \rvert}$
0			
1			
2			
3			
4			
5			
6			
7			

Sawtooth Wave—Theoretical Results			
n	**Associated Frequency**	**$\lvert b_n \rvert$**	**Normalized Magnitude** $\frac{\lvert b_n \rvert}{\lvert b_1 \rvert}$
0	–	–	–
1			
2			
3			
4			
5			
6			
7			

Triangular Wave—Theoretical Results			
n	**Associated Frequency**	**$\lvert a_n \rvert$**	**Normalized Magnitude** $\frac{\lvert a_n \rvert}{\lvert a_1 \rvert}$
0			
1			
2			
3			
4			
5			
6			
7			

In the space below, sketch magnitude frequency spectrum of each signal (remember, graphs have axes, labels, and titles).

Before proceeding, have the instructor check your work.

Instructor Verification:_____

EE354 Lab 2: Graded Results Cover Sheet **Name: _____**

Matlab Square Wave Fourier Series Graph	**Square Wave Anritsu Spectrum**
Matlab Sawtooth Wave Fourier Series Graph	**Sawtooth Wave Anritsu Spectrum**
Matlab Triangle Wave Fourier Series Graph	**Triangle Wave Anritsu Spectrum**

Comparison of Theoretical and Reconstructed Square Wave

For each of the three signals, compare the theoretical Normalized Magnitude Coefficients from the Pre-Lab and hardware measured Normalized Magnitude Coefficients from Part 2. How well does theory match the measured values[1]? If your values are significantly different, to what sources of error would you attribute the differences?

_____

_____

_____

_____

_____

[1] A good engineer does NOT state that the values are "close", "close enough", "good enough", or otherwise use nonspecific terminology when comparing numeric results. If you have a specification, you can state "all values are within the specified range/limits/tolerances". If not, you can state "the measured values for the square wave are, on average, 5% lower than the theoretical predicted values."

Lab Part 1: Simulation

Using Matlab, generate each of the original three waveforms and compare them against the Fourier Series representation consisting of 1, 3, 5, and 7 terms. To perform the comparison, for each waveform, generate a single plot that contains the original signal, and the four Fourier Series representations. As the number of terms in the summation increases, you should observe that the approximation to the original waveform improves dramatically. **Remember**, before you get started, answer the following two questions: (1) what is my sampling frequency and (2) what should my sampling frequency be? For this lab, to get a good clean time-domain plot, I recommend using a sampling frequency that is 5-10 times greater than the Nyquist frequency.

To generate each of the original waves, you will need to use two new Matlab commands: **`square`** and **`sawtooth`**. These commands operate in a manner very similar to `sin` and `cos` for generating signals.

To generate the square wave, the Matlab command is:

```
s = A.*square(2.*pi.*fc.*t)
```

Where A is the desired amplitude of the square wave, fc is the desired center frequency, and t is your time vector (re-read the paragraph above about the sampling frequency). Executing this command should produce a nice square wave at the desired frequency and amplitude.

To generate the sawtooth and triangle wave, we need to use the Matlab `sawtooth` command:

```
s = A.*sawtooth(2.*pi.*fc.*t, W)
```

Where A is the desired amplitude of the triangle wave, fc is the desired center frequency, and t is your time vector (re-read the paragraph above about the sampling frequency). W in this case is the "width" of the sawtooth waveform. A width of W = 1.0 produces a sawtooth waveform, and a width of W = 0.5 produces a triangle wave. Executing these commands should produce a nice sawtooth/triangle wave at the desired frequency and amplitude.

Printout a copy of your three plots comparing the original waveforms and the Fourier Series representations corresponding to summing n = 1, 3, 5, and 7 terms, and turn them in with the completed lab.

Before proceeding, have the instructor check your work.

Instructor Verification:_____

Lab Part 2: Hardware Measurements of the Three Signals

Now, connect the Function Generator to the Oscilloscope as shown in Figure 1 below. Use the function generator to create each of these signals. *For each* of the three signals, follow the steps below and fill in the table that follows.

Some useful notes:

-The min and max value of each signal can easily be set using the ***HiLevel*** and ***LoLevel*** buttons.
-A triangular wave can be created from a saw-tooth wave by adjusting the ***Symmetry*** to 50%.
-The ***Graph*** button will show you a detailed image of one period of the signal.

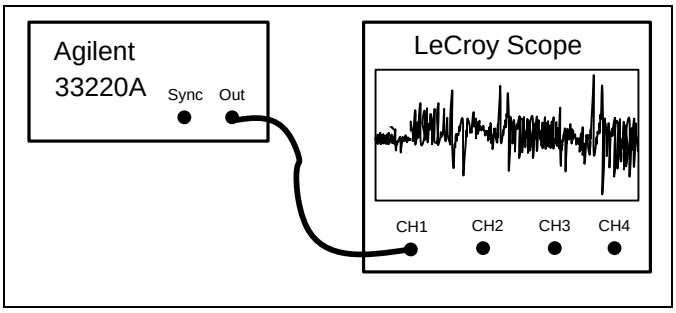

Figure 1: Agilent Signal Generator to LeCroy Scope Connection.

1. Adjust the time scale on the oscilloscope to view a few periods of the waveform. Verify the amplitude, frequency, and period of the waveform. Disconnect the signal from the Oscilloscope, and connect it to the "RF In" input of the Anritsu Spectrum Analyzer as shown in Figure 2.

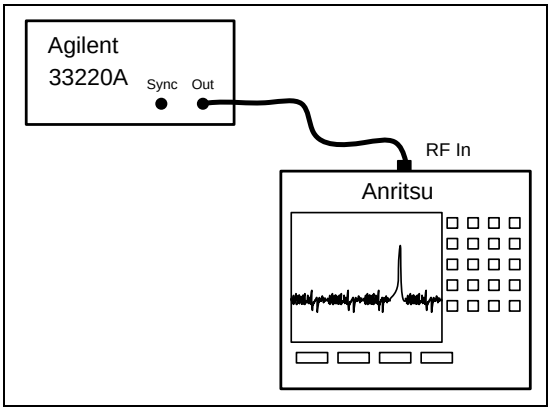

Figure 2: Agilent Signal Generator to Anritsu Spectrum Analyzer Connection.

2. Reset the spectrum analyzer to the factory default (see Lab 1 for the procedure), and then adjust the display so that the frequency and amplitude range is sufficient to show the first seven (7) harmonics of your desired signal.

3. Change the amplitude scale to linear vice log. Press the *AMPLITUDE* function hard key, select the *Units* soft key, then the *Linear* soft key.

4. To make the peaks stand out more on the spectrum analyzer, adjust the reference voltage until the largest peak takes up most of the display vertically (i.e., so that the max peak goes from near the bottom to the top).

5. Use the marker to measure frequency and peak value for all the peaks and fill in the following tables. The last column is used to normalize the values so the largest peak height is 1.0…this allows a direct comparison with theory. Note that that if the signal has a non-zero average value (i.e., dc value seen at a frequency of 0 Hz), you cannot measure it on the spectrum analyzer, so we will ignore the a_0 term (k = 0) for all three signals.

Print out a copy of the spectrum for each waveform and turn it in with your report.

Square Wave—Hardware Results			
n	**Associated Frequency**	**| a_n | (Observed)**	**Normalized Magnitude (Observed)** $\frac{\lvert a_n \rvert}{\lvert a_1 \rvert}$
0	**XXXXXXXXXX**	**XXXXXXXXX**	**XXXXXXXXXXXX**
1			
2			
3			
4			
5			
6			
7			

Sawtooth Wave—Hardware Results			
n	**Associated Frequency**	**| b_n | (Observed)**	**Normalized Magnitude (Observed)** $\frac{\lvert b_n \rvert}{\lvert b_1 \rvert}$
0	**XXXXXXXXXX**	**XXXXXXXXXXX**	**XXXXXXXXXXXX**
1			
2			
3			
4			
5			
6			
7			

Triangular Wave—Hardware Results			
n	**Associated Frequency**	**| a_n | (Observed)**	**Normalized Magnitude (Observed)** $\frac{\lvert a_n \rvert}{\lvert a_1 \rvert}$
0	**XXXXXXXXXX**	**XXXXXXXXXXX**	**XXXXXXXXXXXX**
1			
2			
3			
4			
5			
6			
7			

When you adjust the frequency (or period) of any of these signals, what changes occur in the display? Do the Fourier series coefficients change? Does anything else change? Try doubling the fundamental frequency specified in part I, then halving the fundamental frequency in part I to answer these questions.

_____

_____

_____

_____

_____

_____

Part 4: Comparison of Hardware and Theory

Now, use Matlab to compare the theoretical and hardware results for just the square wave. This portion of the lab will also serve to introduce the creation of m-files in Matlab.

To begin, in Matlab, go to **FILE → NEW → m-file**. A blank screen will then appear in a new window.

First, we need to clear out Matlab's memory and set up our variables. **NOTE**: Use the recorded frequency and amplitude values from the *square wave table in Part 3* of the lab, **NOT** the ones given below.

```
clear all
close all

fs = #####;                % Establish our Sampling Frequency
f0 = #####;                % Establish the square wave frequency
delt = 1/fs;               % Time increment between samples
t=-2e-6:delt:2e-6;         % Set up time axis
f0 = 1e6;                  % Fundamental Frequency

% Measured Frequency Array, use actual measured values
f = [1e6 3e6 5e6 7e6 9e6];

% Measured a-values, Note: added negative signs manually because the
% Spectrum analyzer only records the magnitude of the signal.
a = [1 -1/3 1/5 -1/7];

% Generate the Theoretical Square Wave and plot it.
s = square(2*pi*f0*t + pi./2);

% "'k-'" sets the color to black, and "'linewidth', 3" makes the line
thicker
% Put the time scale in Microseconds to make visualization easier

time = t .*1e6;
plot(time,s, 'k-', 'linewidth', 3)
```

To run the file just go to **DEBUG → RUN**, or simply press "F5". You should see a plot of the theoretical square wave.

Next, add in the code necessary to plot both the theoretical square wave as well as the "measured" square wave on the same graph. For the measured square wave, use your recorded values of a_n and recorded frequencies of the tones that are present. Don't forget to add x-axis and y-axis labels, as well as a legend (you may find the following commands useful: `xlabel, ylabel, title, and legend`).

Print out a copy of your plot and turn it in with the lab.

Again, compare the theoretical and hardware results. How well does theory match real-life?

_____

_____

_____

_____

Items to Turn In

Completed Lab
Matlab Code
Plot of the Matlab generated waveforms and comparison with Fourier Series Representations
Printout of the Anritsu captured spectrum for each of the three waveforms
Printout of the comparison between the theoretical square wave and the Matlab reconstructed square wave.

Appendix I: Fourier Series Coefficients Table

Note: In this table, the a_n values are associated with the cosine terms; the b_n values are associated with the sine terms.

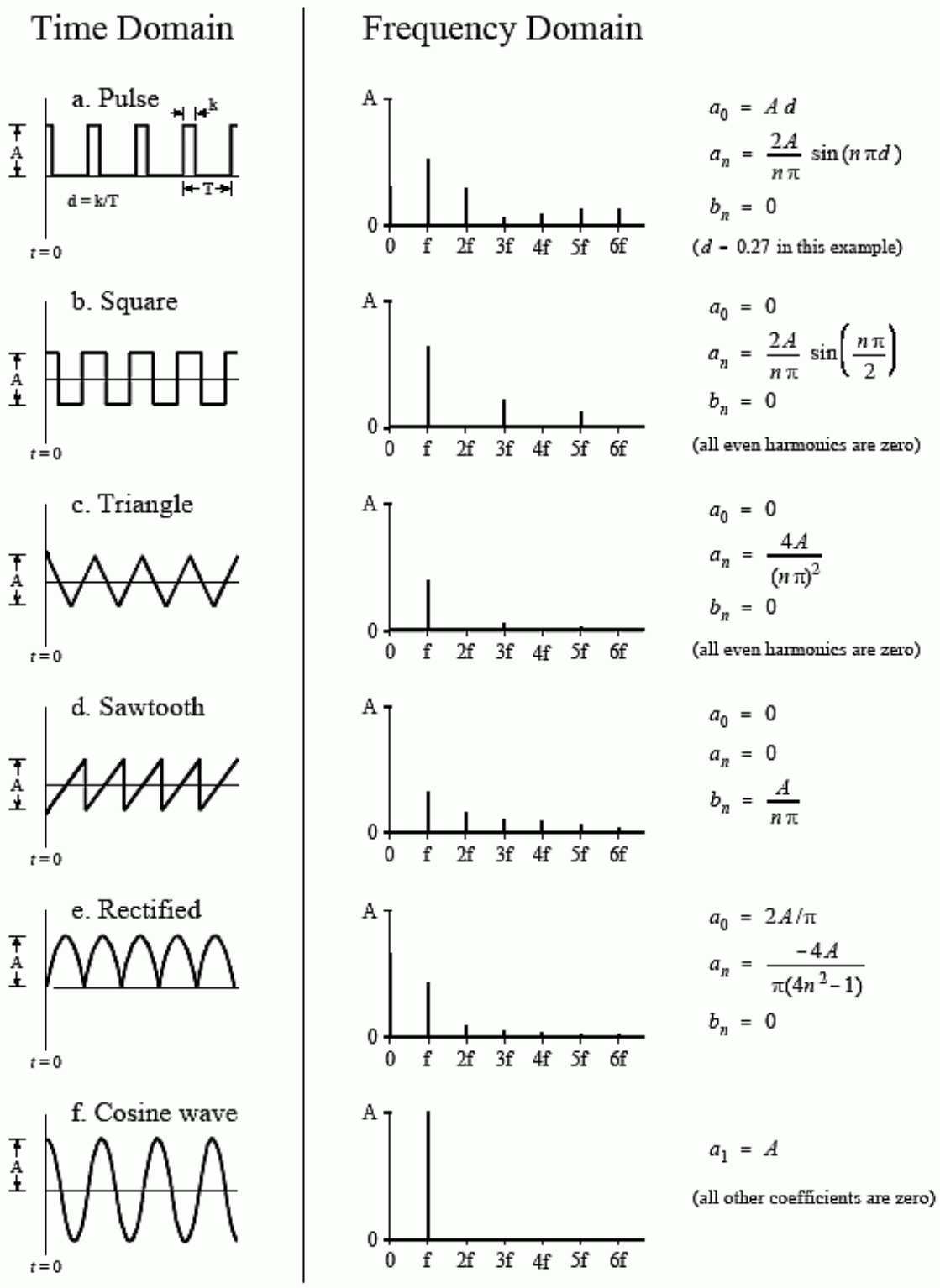

FIGURE 13-10
Examples of the Fourier series. Six common time domain waveforms are shown, along with the equations to calculate their "*a*" and "*b*" coefficients.