Name: _____

EE354 Spring 2012 Lab 4: Introduction to Amplitude Modulation

In this lab you will create and investigate the properties of a simple Amplitude Modulated (AM) waveform. You will use Matlab to create and view an AM signal in the time and frequency domain, and use the oscilloscope and spectrum analyzer to validate your simulated results with hardware.

Part 1: Pre-Lab

An amplitude modulation (AM) waveform can be represented mathematically by:

$$s(t) = A_c\left[1+\mu m(t)\right]\cos\left(2\pi f_c t\right),$$

where $m(t)$ is the message, and $A_c\cos\left(2\pi f_c t\right)$ is the carrier.

1. For a 5 MHz cosine carrier w/**amplitude** 1V, and a 5 kHz cosine message w/**amplitude** 0.75V, fill out the Theoretical column of Table 1.

   ***** Note:** Amplitudes should be in Volts, Powers in dBm.

Table 1: Theoretical and Measured Characteristics of the AM Signal

Parameter	Theoretical Value	Matlab Simulated Value	Measured Value
Min value of envelope, A_{min}			
Max value of envelope, A_{max}			
Amplitude of carrier, A_c			
% modulation			
AM Power Efficiency, η			
Carrier Frequency, f_C			
Upper Sideband Frequency, f_{USB}			
Lower Sideband Frequency, f_{LSB}			
RF Bandwidth			
Overall power (50Ω load), P_{AM}			
Power of carrier (50Ω load), $P_{carrier}$			
Power of Upper Sideband (50Ω load), P_{USB}			
Power of Lower Sideband (50Ω load), P_{LSB}			

2. Sketch the AM signal and the spectrum of the AM signal (positive frequencies only) The sketches do not need to be to scale, however, all pertinent data needs to be labeled.

AM Signal – Time Domain
AM Signal – Frequency Spectrum

Instructor Verification:_____

Part 2: Simulation

1. In MATLAB, create the AM signal from part I (Hint: write an m-file – it will make your life easier!). You will need to generate a sufficiently long time axis to be able to resolve the upper and lower sideband frequencies.

   Create a plot of the AM signal…zoom in as necessary to see approximately 0.5 msec of the signal. Using Matlab, determine the following and record them in the Matlab Simulated column of Table 1: Envelope minimum, Envelope maximum, Carrier amplitude, modulation index, power in the carrier, and power in the sidebands. **Note:** you can also use the frequency plot in step 2 to fill in the power portions of the table (that is, you can use the plot to determine the amplitudes of the carrier and sidebands, then compute the power in these sinusoids).

2. Use MATLAB to create a plot of the magnitude of the frequency spectrum (positive frequencies only). Zoom in to clearly see the sidebands and carrier. Turn in this properly labeled plot with your report. If you forgot how to generate the spectrum, review the sample code in earlier labs, but realize that you are taking the FFT of the signal in this lab, using the sample frequency from this lab.

Printout a copy of both your time-domain and frequency spectrum of the AM signal and turn them in with your report.

Instructor Verification:_____

What do you expect to see when you observe the time- and frequency-domain signal? Do the plots match what you expected?

_____

_____

Did the RF center frequency line up with your designed center frequency? Is the signal bandwidth and number/amplitude of sidebands correct? Why or why not? If you have errors, correct your design before proceeding.

_____

_____

_____

Part 3: Hardware Measurements of the AM Signal

1. To begin, use the function generator (use the Agilent 33220A) to create a 5 MHz sine wave with a peak-to-peak voltage of 2.0V.

2. Use a second function generator to produce a 5 kHz sine wave. Connect the output of this function generator to the "Modulation In" input on the back of the first function generator. Connect the "Sync" output to Channel 2 of the Oscope. See the figure below for connection details.

Important: The Agilent 33220A signal generator Modulation Input determines the modulation index based on a $5V_{pp}$ input (i.e., a signal input with a $5V_{pp}$ amplitude will yield 100% modulation). Configure the amplitude of the 5 kHz signal generator to achieve your desired modulation index.

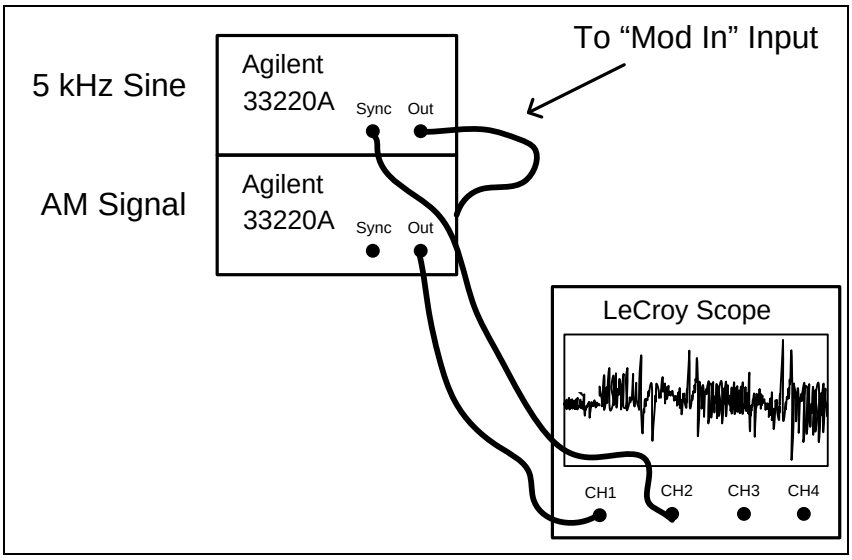

Figure 1: Hardware Connection for AM Modulation and Measurement

3. Connect the function generator to the LeCroy oscilloscope. Be sure the Function Generator is set for a 50 Ω output impedance (*Utility→Output Setup*), and the Oscope is set for a 50 Ω input impedance. Configure the Oscope to trigger on Channel 2.

4. Now turn on the AM modulation of the first function generator by using the "MOD" button, and selecting the External source.

5. You will likely notice that the amplitude of your AM waveform decreases significantly when the modulation is turned on. The reason has to do with an internal loading of the 33220A signal generator. You will need to adjust the peak-to-peak output voltage of the carrier wave until the scope measurement of the amplitude is 0.75V. A value around 2.5-3.5 V_{pp} seems to work well in most cases.

6. On the Oscope, adjust the settings on the display as needed to see a few periods of the envelope and to make the envelope's amplitude fill the screen, then push the *Stop* button. Measure and record/compute the following information about the AM signal in the "Measured" column of Table 1: Min value of envelope, Max value of envelope, Amplitude of carrier, % modulation, AM Power Efficiency, and Carrier Frequency.

Capture a copy of your AM waveform from the oscilloscope (see Lab 1 for details), and include a printout with your report.

7. Now, disconnect the AM signal from the Oscope and connect it to the input of the spectrum analyzer. Using the marker, measure the frequency and power of the carrier and the two sidebands, as well as the occupied bandwidth, and record these values in Table 1.

Capture a copy of your AM waveform from the spectrum analyzer (see Lab 1 for details), and include a printout with your report.

8. Finally, use the spectrum analyzer to demodulate the AM signal.

   a. Select **MEAS→More→AM/FM Demod→Demod Freq.** Set the frequency to 5 MHz.

   b. Select **Demod Type.** Set the type to AM.

   c. Select **Volume.** Set the volume to 80%.

   d. Select **Time.** Set the time to 1sec.

   e. Turn the Demod on, and listen for a few sweeps. Verify that you hear a 5 kHz tone output from the speaker.

Instructor Verification of Audio Demod:_____

Compare the theoretical, simulated, and measured values from both Table 1 and the generated/measured figures. Do the values and waveforms match? Why or why not? How closely do the measured values match the predicted vales?

_____

_____

_____

_____

_____

_____

Items to turn in with your report

Plot of the simulated time-domain AM signal.
Plot of the simulated frequency-domain AM signal.
Matlab plot of the AM signal as captured by the oscilloscope.
Plot of AM signal as captured by the spectrum analyzer.