Name:_____

EE354: Lab 12 AM and FM Performance in AWGN

This lab will have you demodulate an AM and FM waveform using Software-Defined Radio techniques and investigate the impact of SNR on the demodulated signal's audio quality.

Part 1: Pre-Lab Theory

Amplitude Modulation

To evaluate SNR, we need to know two fundamental things: Signal Power and Noise Power at the *output* of the detector. For an AM Envelope Detector with a sinusoidal modulating signal, we have the following relationship:

$$snr_o = \frac{A^2 \mu^2}{4 N_\phi f_m}$$

Where: A is the amplitude of the carrier signal [Volts]

μ is the modulation index of the AM signal.

f_m is the cutoff frequency of the LPF in the Envelope Detector [Hz]

→ In your calculations, use a LPF cutoff frequency of 30 kHz.

N_ϕ is the **two-sided** Noise Spectral Density [Watts/Hz]

snr_O is the SNR at the output of the envelope detector [linear ratio]

For this lab, we will be transmitting the following waveform:

$$s(t) = A\left[1 + \mu m(t)\right]\cos\left(2\pi f_c t\right)$$

Where:

$$A = 0.4V$$
$$\mu \approx 0.8 - 0.9$$
$$f_c = 300\,kHz$$

Frequency Modulation

We can also repeat this process for Frequency Modulation (note that FM and PM will produce different results). For an FM Discriminator Detector with a sinusoidal signal modulating signal, we have the following relationship:

$$snr_o = \frac{3A^2 k_f^2}{4N_\phi f_m^3}$$

Where: A is the amplitude of the carrier signal [Volts]

k_f is the FM Modulation Constant [Hz/Volt].

f_m is the cutoff frequency of the LPF in the Envelope Detector [Hz]

→ In your calculations, use the LPF cutoff frequency of 30 kHz.

N_ϕ is the **two-sided** Noise Spectral Density [Watts/Hz]

snr_O is the SNR at the output of the envelope detector [linear ratio]

For this lab, we will be transmitting the following waveform:

$$s(t) = A\cos\left(2\pi f_c t + 2\pi k_f \int_{-\infty}^{t} m(\alpha)\, d\alpha\right)$$

Where:

$$A_c = 0.4V$$
$$k_f = 30\,kHz/V$$
$$f_c = 300\,kHz$$

Additive White Gaussian Noise

In this lab, we will be using one of the Agilent 33220A function generators to produce a AWGN (Additive White Gaussian Noise) signal at three power levels: +10dBm, 0 dBm, and -10 dBm. These power levels represent the **total integrated power** across the **10 MHz Noise Equivalent Bandwidth** of the signal generator. To get the two-sided Noise Spectral Density, we simply divide:

$$\frac{N_\phi}{2} = \frac{p_{noise_{total}}}{2 \bullet NBW}$$

Where: $p_{noise_{total}}$ is the total integrated noise power [Watts]

NBW is the Noise Equivalent Bandwidth of the signal generator [Hz]

Note: Make sure you apply the Watts → dBm conversion properly.

1. Determine the two-sided Noise Spectral Density for each of the three noise generator output power levels and record them in Table 1.

2. Determine the corresponding AM and FM SNR's in terms of dB and record them in Table 1. Calculate the AM and FM Bandwidth (assume a 15 kHz modulating signal) and record that in the table as well.

Table 1: Noise Spectral Density Calculation

Noise Generator Power (dBm)	$\frac{N_0}{2}$ (Watts/Hz)	AM SNR (dB)	AM BW (kHz)	FM SNR (dB)	FM BW (kHz)
-10	1 nW/Hz				
0	10 nW/Hz				
+10	100 nW/Hz				

Question: An SNR of 5-10 dB generally represents a barely intelligible voice signal. Telephone-quality signals have an SNR of approximately 25-35 dB; broadcast TV audio is typically 40-50 dB, and CD quality is over 90 dB. Based on those comparison points, describe qualitatively how demodulated audio would sound in each of the three cases for AM and FM (you may find the audio Subjective Quality Factor (SQF) table below to be helpful). Compare the SNR performance of AM and FM – which one is better and what causes the difference?

_____

_____

_____

_____

Table 2: Subjective Quality Factor Mean Opinion Score

Rating	Quality	Comments
5	Excellent	No noticeable degradation. Similar to FM Radio broadcast.
4	Good	Slightly noticeable degradation, but not disturbing. Similar to standard voice-grade telephone service.
3	Fair	Noticeable degradation, slightly disturbing. Similar to cell-phone or AM Radio broadcast.
2	Poor	Significant degradation but tolerable. Similar to military voice or shortwave Ham radio communications.
1	Bad	Severe degradation, unintelligible or intolerable.

Instructor Verification of Theoretical Predictions: _____

Hardware Setup for AM Signals

Part 1: Configuring the Audio Output Level

1. To properly generate the AM signal, we have to recognize that our AM modulator needs a scaled input, where an input of 5V represents 100% modulation of our carrier signal. Thus, we need to set the proper modulating signal amplitude to achieve our $\mu = 0.85$ modulation index.

2. Using an adapter provided by the instructor, connect the PC Audio Output (from the front panel output) to the input of the provided Op-Amp buffer circuit. Connect the output of the Op-Amp buffer circuit to Channel 1 of the oscilloscope input as shown in the diagram below.

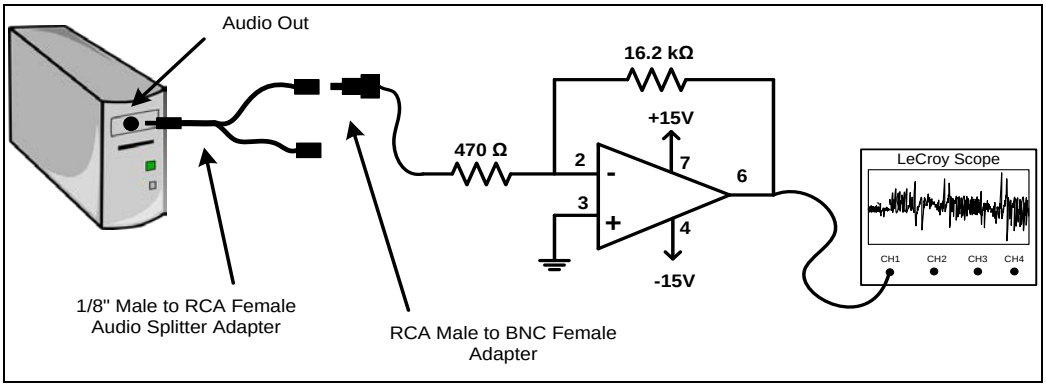

Figure 1: Illustration of the connection between the PC Audio Output and the LeCroy Oscilloscope.

3. On the PC, open the PC Volume Control panel, and set both the Main and Wave volumes to approximately 50% of their maximum values, as shown in Figure 2. Using the PC, navigate to your favorite YouTube music video or MP3 location and select a song to play. (**Note:** You want a song that you can play repeatedly, so a site like Pandora won't work). Play the audio file and observe the result on the oscilloscope screen.

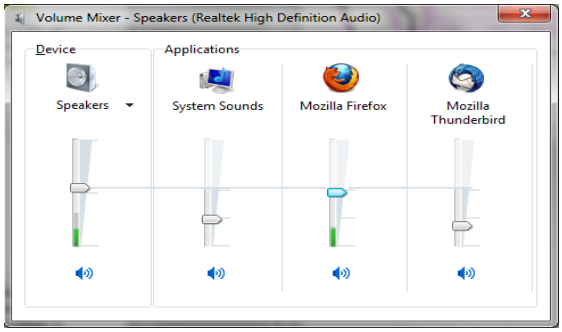

Figure 2: Volume Control Configuration

4. Adjust the timebase of the oscilloscope to display several tens or hundreds of milliseconds of the audio signal. Adjust the amplitude (volume) of the audio signal until the peak falls between 4.5V and 5.0V. Use the scope to measure the RMS voltage of the audio waveform. **Note:** Both the peak and RMS value will bounce around somewhat, so make a good guess as to the average value.

   Record the Peak voltage of the audio signal: _____

   Record the RMS voltage of the audio signal: _____

   Calculate the AM Modulation Index based on the Peak Voltage: _____

   Calculate the AM Modulation Index based on the RMS Voltage: _____

Part 2: Recording Noisy AM Signals

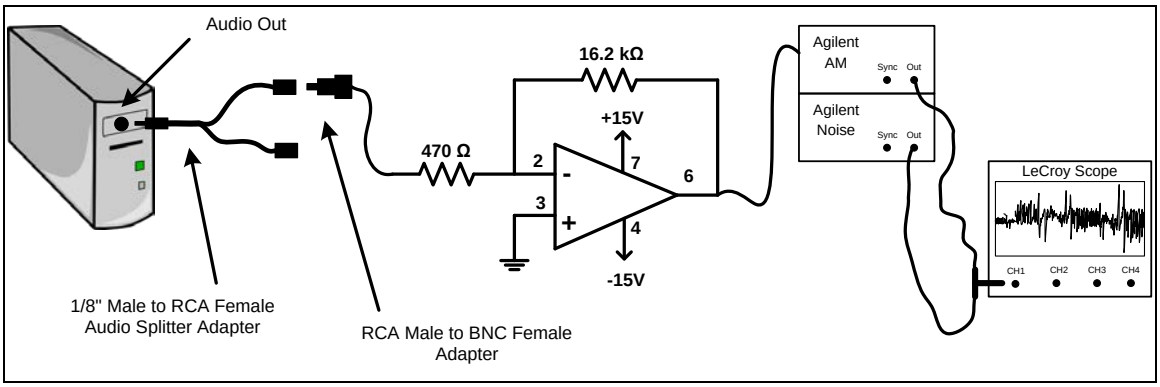

Figure 3: Measurement Setup Connections

1. To begin, use one of the Agilent 33220A function generators to create a 300 kHz sine wave with a peak-to-peak voltage of 1.0V. This function generator will be used to produce the AM modulated signal. Leave the AM Modulation Turned **OFF** at this point.
2. Connect the Audio Output (from the Op-Amp buffer circuit) to the MOD IN input of the AM signal generator (See Figure 1). Next, using a BNC T connector, connect a second Agilent signal generator (this will be the noise generator) to the output of your AM signal generator (see Figure 3).
3. Configure the noise generator to produce a noise waveform. On the front panel, select "Noise", then select "Amplitude" and set the amplitude to a power level of -30 dBm. Turn the Noise Generator output ON.
4. Before proceeding, verify that the 300 kHz signal (with no modulation) appears on the oscilloscope screen. Verify that the signal generator produces an actual amplitude of 0.4V (modulation is turned off).
5. Now turn ON the AM modulation of the AM function generator by using the "MOD" button, and selecting the External source.

Note: The spectrum analyzer will demodulate AM signals (see previous labs for instructions), and is a great way to verify that you have generated the AM signal properly.

6. Adjust the oscilloscope to record 5.0 Million Samples, and configure the sampling frequency to be 1.0 MHz. Your timebase on the scope screen should be 500 msec/division. Turn off all measurement and math functions on the scope.
7. Play the audio file on the PC, but leave the output of the noise generator turned OFF. Observe the AM signal on the scope (you should see a modest amount of amplitude change). Press the "Single" button on the scope, and when the scope is finished capturing the signal, save it to a Matlab .dat file. This will be your noise-free AM signal. This signal serves as a reference to verify that your hardware is setup properly and that your demodulator is functioning properly.
8. We should note at this point that we have captured an AM signal with **broadband** noise. Our theoretical calculations presume that the noise input to the envelope detector has been **bandlimited**. Therefore, in order to make a meaningful comparison between the predicted SNR/SQF and the actual demodulated signal, we need to insert a bandpass filter in front of our envelope detector to limit the noise power that makes it into the receiver.

9. Using the filter_RF function from the course website, set up a bandpass filter centered at 300 kHz with a -3 dB bandwidth of 60 kHz. Using your Matlab AM envelope-detector code from the prior labs, load the Oscilloscope captured data into Matlab (Note: it's a big file, it may take some time!), filter the input samples, demodulate the AM signal, and play it using the PC's sound card. Your demodulated signal in this case should be several seconds of whatever audio signal you were outputting from the PC.
10. Replay the audio file on the PC, but this time, turn ON the output of the noise generator and observe the AM signal on the oscilloscope. It may drop slightly in amplitude, but should otherwise appear unchanged. Configure the noise generator to output a -10.0 dBm power level, and record and demodulate the signal as before.
11. Repeat Step 19 for the 0 dBm and +10 dBm output power cases. For each noise power level, create a meaningful plot that consists of the RF Spectrum, a snippet of the demodulated time-domain audio, and the demodulated audio frequency spectrum (showing 0 – 20 kHz). Demonstrate the successful demodulation of your three signals by playing the recovered baseband signal for the instructor.
12. Rate the Subjective Quality Factor of your demodulated signal in Table 3 (see back page), based on the description of SQF in Table 2.

Question: Recall that the performance metric for Analog communications is SNR. For AM, how does the SNR correlate with the quality of the demodulated audio signal?

_____

_____

_____

_____

Instructor Verification of Successful Audio Demod:

-10 dBm: _____ 0 dBm: _____ +10 dBm: _____

Hardware Setup for FM Signals

Part 1: Configuring the Audio Output Level

1. To properly generate the FM signal, we have to recognize that our FM modulator needs a scaled input, where an input of 5V represents 100% carrier deviation. Thus, we need to set the modulating signal amplitude to 5.0V in order to achieve our full 30 kHz frequency deviation.
2. Repeat the amplitude setup and configuration process from **Part 1: Configuring the Audio Output Level of the AM Hardware Setup** section.
3. Adjust the timebase of the oscilloscope to display several tens or hundreds of milliseconds of the audio signal. Adjust the amplitude (volume) of the audio signal until the peak falls between 4.5V and 5.0V. Use the scope to measure the RMS voltage of the audio waveform. Note: Both the Peak and RMS value will bounce around somewhat, so make a good guess as to the average value.

   Record the Peak voltage of the audio signal: _____

   Record the RMS voltage of the audio signal: _____

   Calculate your FM Frequency Deviation based on the Peak voltage: _____

   Calculate your FM Frequency Deviation based on the RMS voltage: _____

Part 2: Recording Noisy FM Signals

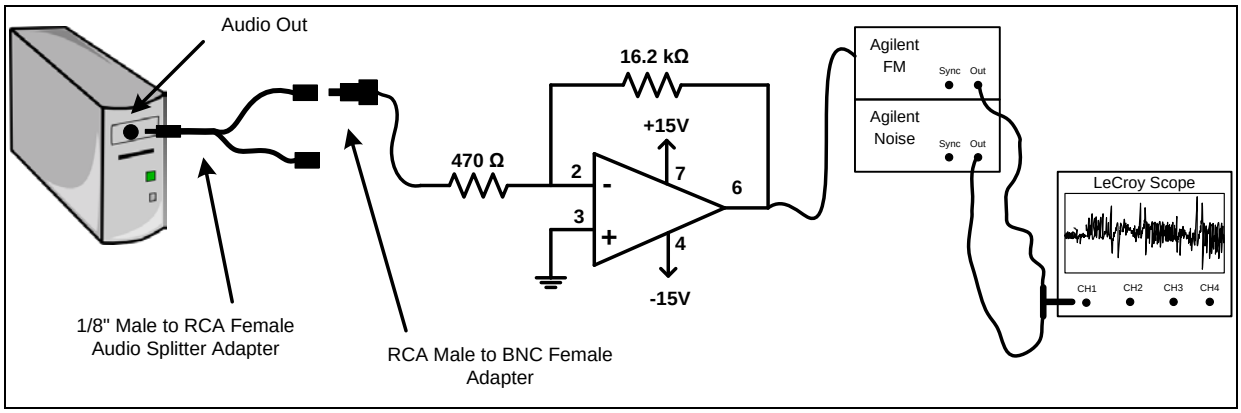

Figure 4: Measurement Setup Connections

1. To begin, use one of the Agilent 33220A function generators to create a 300 kHz sine wave with an output amplitude of 0.4 Volts. Configure the function generator to produce FM Modulation, with a frequency deviation of 30 kHz and an External source. This function generator will be known as the "FM signal generator".
2. Connect the Audio Output (from the Op-Amp buffer circuit) to the MOD IN input of the FM signal generator (See Figure 4). Next, using a BNC T connector, connect a second Agilent signal generator (this will be the noise generator) to the output of your AM signal generator (see Figure 1). Leave the FM Modulation turned **OFF**.
3. Configure the noise generator to produce a noise waveform. On the front panel, select "Noise", then select "Amplitude" and set the amplitude to a power level of -30 dBm. Turn the Noise Generator output **ON**.

4. Before proceeding, verify that the 300 kHz signal (with no modulation) appears on the oscilloscope screen. Verify that the signal generator produces an actual amplitude of 0.4V (modulation is turned on, but with no modulating signal).
5. Now turn **ON** the FM modulation of the FM function generator by using the "MOD" button, and selecting the External source.

Note: The spectrum analyzer will demodulate FM signals (see previous labs for instructions), and is a great way to verify that you have generated the FM signal properly.

7. Adjust the oscilloscope to record 5.0 Million Samples, and configure the sampling frequency to be 1.0 MHz. Your timebase on the scope screen should be 500 msec/division. Turn off all measurement and math functions.
8. Play the audio file on the PC, but leave the output of the noise generator turned OFF. Observe the FM signal on the scope (you should see a modest amount of amplitude change). Press the "Single" button on the scope, and when the scope is finished capturing the signal, save it to a Matlab .dat file. This will be your noise-free FM signal. This signal serves as a reference to verify that your hardware is setup properly and that your demodulator is functioning properly.
9. As with the AM signal, we have captured an FM signal with broadband noise. Our theoretical calculations presume that the noise input to the envelope detector has been bandlimited. Therefore, in order to make a meaningful comparison between the predicted SNR/SQF and the actual demodulated signal, we need to insert a bandpass filter in front of our envelope detector to limit the noise power that makes it into the receiver.
10. Using the filter_RF function from the course website, set up a bandpass filter centered at 300 kHz with a -3 dB bandwidth of 60 kHz. Using your Matlab FM demodulator code from the prior labs, load the Oscilloscope captured data into Matlab (Note: it's a big file, it may take some time!), filter the input samples, demodulate the FM signal, and play it using the PC's sound card. Your demodulated signal in this case should be several seconds of whatever audio signal you were outputting from the PC.

Note: To get the FM Demodulator to perform properly in the presence of noise, you will need to implement an extremely aggressive hard limiter.

11. Replay the audio file on the PC, but this time, turn ON the output of the noise generator and observe the FM signal on the oscilloscope. It may drop slightly in amplitude, but should otherwise appear unchanged. Configure the noise generator to output a -10.0 dBm power level, and record and demodulate the signal as before.
12. Repeat Step 10 for the 0 dBm and +10 dBm output power cases. For each noise power level, create a meaningful plot that consists of the RF Spectrum, a snippet of the demodulated time-domain audio, and the demodulated audio frequency spectrum (showing 0 – 20 kHz). Demonstrate the successful demodulation of your three signals by playing the recovered baseband signal for the instructor.
13. Rate the Subjective Quality Factor of your demodulated signal in Table 3 (see back page), based on the description of SQF in Table 2.

Question: Recall that the performance metric for Analog communications is SNR. For FM, how does the SNR correlate with the quality of the demodulated audio signal?

_____

_____

_____

_____

Instructor Verification of Successful Audio Demod:

-10 dBm: _____ 0 dBm: _____ +10 dBm: _____

Table 3: SNR for AM and FM Signals

Noise Generator Power (dBm)	$\frac{N_0}{2}$ (Watts/Hz)	AM SNR (dB)	AM Audio SQF	FM SNR (dB)	FM Audio SQF
-10	1 nW/Hz				
0	10 nW/Hz				
+10	100 nW/Hz				

Table 2: Subjective Quality Factor Mean Opinion Score

Rating	Quality	Comments
5	Excellent	No noticeable degradation. Similar to FM Radio broadcast.
4	Good	Slightly noticeable degradation, but not disturbing. Similar to standard voice-grade telephone service.
3	Fair	Noticeable degradation, slightly disturbing. Similar to cell-phone or AM Radio broadcast.
2	Poor	Significant degradation but tolerable. Similar to military voice or shortwave Ham radio communications.
1	Bad	Severe degradation, unintelligible or intolerable.