Names:_____

EE354: Lab 13-ASK, FSK, and PSK Demodulation

This lab will have you create and deomodulate (in the presence of noise) a simple amplitude shift-keyed (ASK), frequency shift-keyed (FSK), and phase shift-keyed (PSK) waveform.

Baseband Data

In order to create the baseband data, a pulse pattern generator at the back of the lab has been configured to produce a "101101111000111001" Bipolar NRZ waveform with levels of approximately -2.5V (binary 0) and 2.5V (binary 1) at a data rate of 10 kbps. The signal is being distributed throughout the lab via a signal distribution system.

******* Before beginning the lab, use the oscilloscope to verify that your lab bench is receiving the baseband data stream properly. If you are not receiving the baseband data, it will be impossible to generate the BPSK waveforms.

Part 1: ASK

Assume that an amplitude shift-keyed (ASK) waveform can be represented mathematically by:

$$s_0(t) = 0, \quad \text{for logic 0}$$
$$s_1(t) = A\cos\left(2\pi\left(500\,kHz\right)t\right), \quad \text{for logic 1}.$$

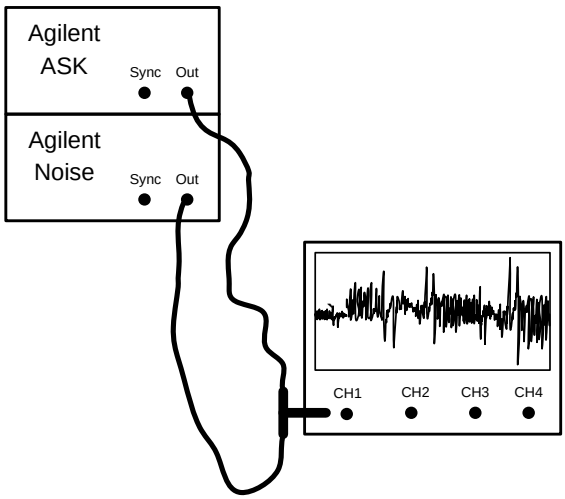

Figure 1: Measurement Setup Connections

1. Using an Agilent 33220A function generator, create a 500 kHz sinusoidal wave with an amplitude of 1.0V. Configure the signal generator for AM Modulation, 100% Modulation Index, and External Input. This signal generator will be the "ASK" signal generator.

2. Connect the baseband data to the "MOD IN" Input on the back of the ASK signal generator. Connect the output of the generator to one input of a BNC T adapter. Connect the output of a second Agilent Signal Generator (the "Noise" signal generator) to the other input of the BNC T, and connect the BNC T output to Channel 1 of the oscilloscope. Configure Channel 1 to have DC Coupling and a 50Ω input impedance.

3. Configure the Noise generator to produce a noise waveform with an output power of -10 dBm. Leave the output turned OFF. Before proceeding, visually verify that the ASK Waveform appears on the oscilloscope screen.

4. Configure the oscilloscope to capture 100,000 samples, and adjust the screen until it displays one complete data pattern. Record the noise-free ASK waveform to a Matlab .dat file. Using the block diagram in Figure 2 as a guide, create an envelope detector in Matlab to demodulate the ASK Waveform. Generate a plot comparing the original ASK waveform with the recovered bits. Identify the recovered bits on your figure. **Include a copy of your plot with your report.**

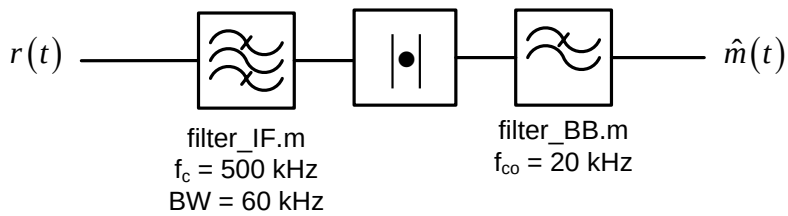

Figure 2: Block diagram of a simple incoherent ASK receiver.

5. Turn the Noise generator ON, and repeat step 4 with the Noise Generator set at an output power of -10 dBm, 0 dBm, and +10 dBm.

Compare the demodulated ASK waveform with your demodulated AM waveform from previous labs. What do you observe about the similarities and differences between the waveforms? How does the noise performance of ASK compare to AM?

_____

_____

_____

_____

_____

Part 2: FSK

Assume that a frequency shift-keyed (FSK) waveform can be represented mathematically by:

$$s_0(t) = A\cos\left(2\pi\left(400\,kHz\right)t\right), \quad \text{for logic 0}$$
$$s_1(t) = A\cos\left(2\pi\left(500\,kHz\right)t\right), \quad \text{for logic 1}$$

*** For this part of the Lab, we will reconfigure the "ASK" generator to be an "FSK" generator. All other connections shown in Figure 1 are the same. **IMPORTANT:** For the first few steps, we will decrease the s_1 frequency to 50 kHz to make it easier to visually identify on the oscilloscope.

1. Using an Agilent 33220A "FSK" function generator, create a 400 kHz sinusoidal wave with an amplitude of 1.0V. **NOTE:** When performing frequency shift keying with this function generator, the frequency selected here will serve as the **s_0 frequency. ←IMPORTANT!**

2. Create the FSK signal:
   a. On the FSK function generator, push the "MOD" button, then set the following values:
      Type: FSK
      Source: External
      Hop Freq: 50 kHz…this will be the **s_1 frequency ←IMPORTANT!**

   b. The binary digital modulating waveform will be the baseband signal distributed throughout the room. Connect the baseband signal to the "MOD IN" Input on the back of the FSK signal generator.

3. Configure the Noise generator to produce a noise waveform with an output power of -10 dBm. Leave the output turned OFF. Before proceeding, visually verify that the FSKWaveform appears on the oscilloscope screen.

4. Configure the oscilloscope to capture 100,000 samples, and adjust the screen until it displays one complete data pattern. **IMPORTANT: Readjust the Hop Frequency to 500 kHz before continuing.**

5. Record the noise-free FSK waveform to a Matlab .dat file. Using the block diagram in Figure 3 as a guide, create an incoherent receiver in Matlab to demodulate the FSK Waveform. Generate a plot comparing the original ASK waveform with the recovered bits. Identify the recovered bits on your figure. Include a copy of your plot with your report.

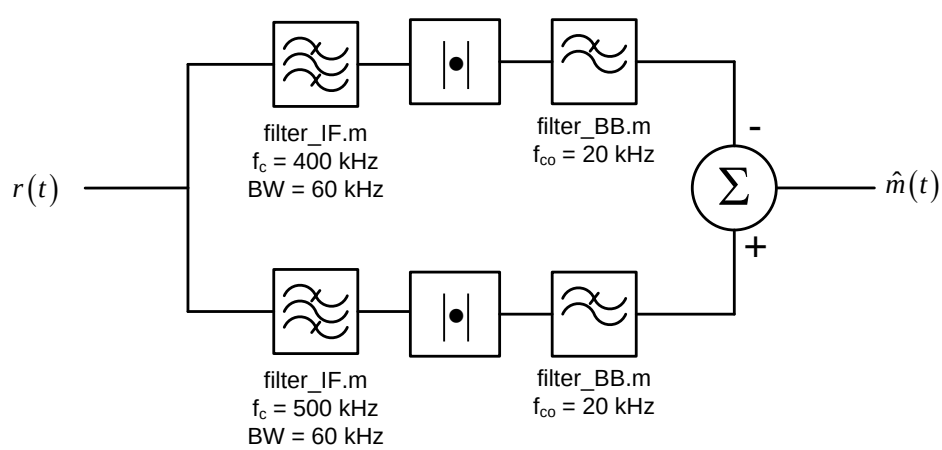

Figure 3: Block diagram of a simple incoherent FSK receiver.

6. Turn the Noise generator ON, and repeat steps 4 and 5 with the Noise Generator set at an output power of -10 dBm, 0 dBm, and +10 dBm.

Compare your captured and demodulated ASK and FSK waveforms. What do you observe about the similarities and differences between the waveforms? How does the noise performance of ASK compare to FSK?

_____

_____

_____

_____

_____

Part 3: PSK

Creating a BPSK waveform is slightly more complicated due to the limitations of the equipment in the lab.

Assume that a binary phase shift-keyed (BPSK) waveform can be represented mathematically by:

$$s_0(t) = \pm 1.0 \cos\left(2\pi\left(1000\,kHz\right)t\right)$$

1. Using an Agilent 33220A function generator, create a, 50 kHz sinusoidal wave (we are using 50kHz initially to make the bit pattern easier to identify visually on the oscilloscope) with an **amplitude of +7 dBm**.

2. Connect the baseband data to the 10 dB attenuator and then to the "IF" Input on the Mini-Circuits SFM-1 Mixe as shown in Figure 1. Connect the output of the generator to the "LO" Input of the mixer. Finally, connect the "RF" output of the mixer **directly to channel 1 of the oscilloscope** (i.e, bypass the noise generator). See Figure 4 below for connection details.

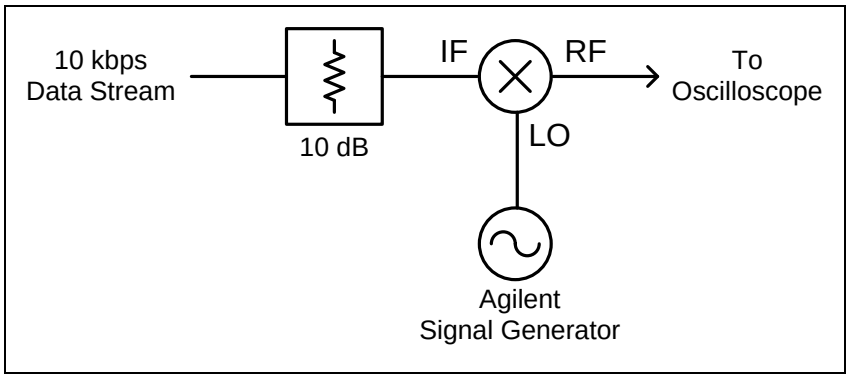

Figure 4: BPSK Measurement Setup Connections

3. Configure the oscilloscope to capture 100,000 samples, and adjust the screen until it displays one complete data pattern.

4. **Change the function generator frequency to 1.0 MHz.** Record the BPSK signal to a Matlab .dat file. Using Matlab, plot the captured waveform and identify the binary "1's" and "0's". Using the diagram in figure 5 demodulate your BPSK signal in Matlab. As you do not know the phase of your carrier wave you'll have to use a "for loop" to adjust the phase or your local oscillator until you achieve a max output signal (see below). Use increments of 22.5 degrees and a range of 0-180 degrees. **Include a printout with your report.**

NOTE: The function generator has an ~0.001% error in frequency so you may have a low frequency modulating you final demodulated signal. (see below). You may wish to try several adjustments to your LO frequency until you remove this artifact. 0.99999 MHz worked for me.

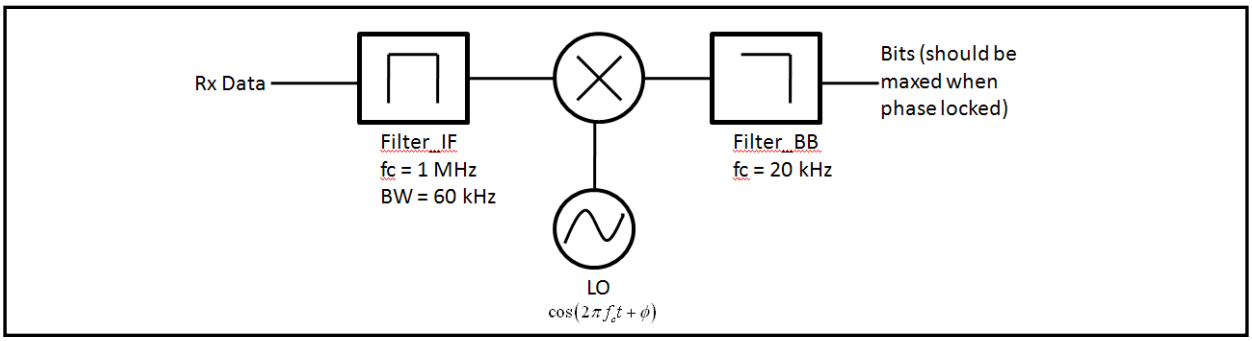

Figure 5: BPSK Demodulation Block Diagram

Below is an example of the mismatch between the carrier and the local oscillator when trying to demodulate.

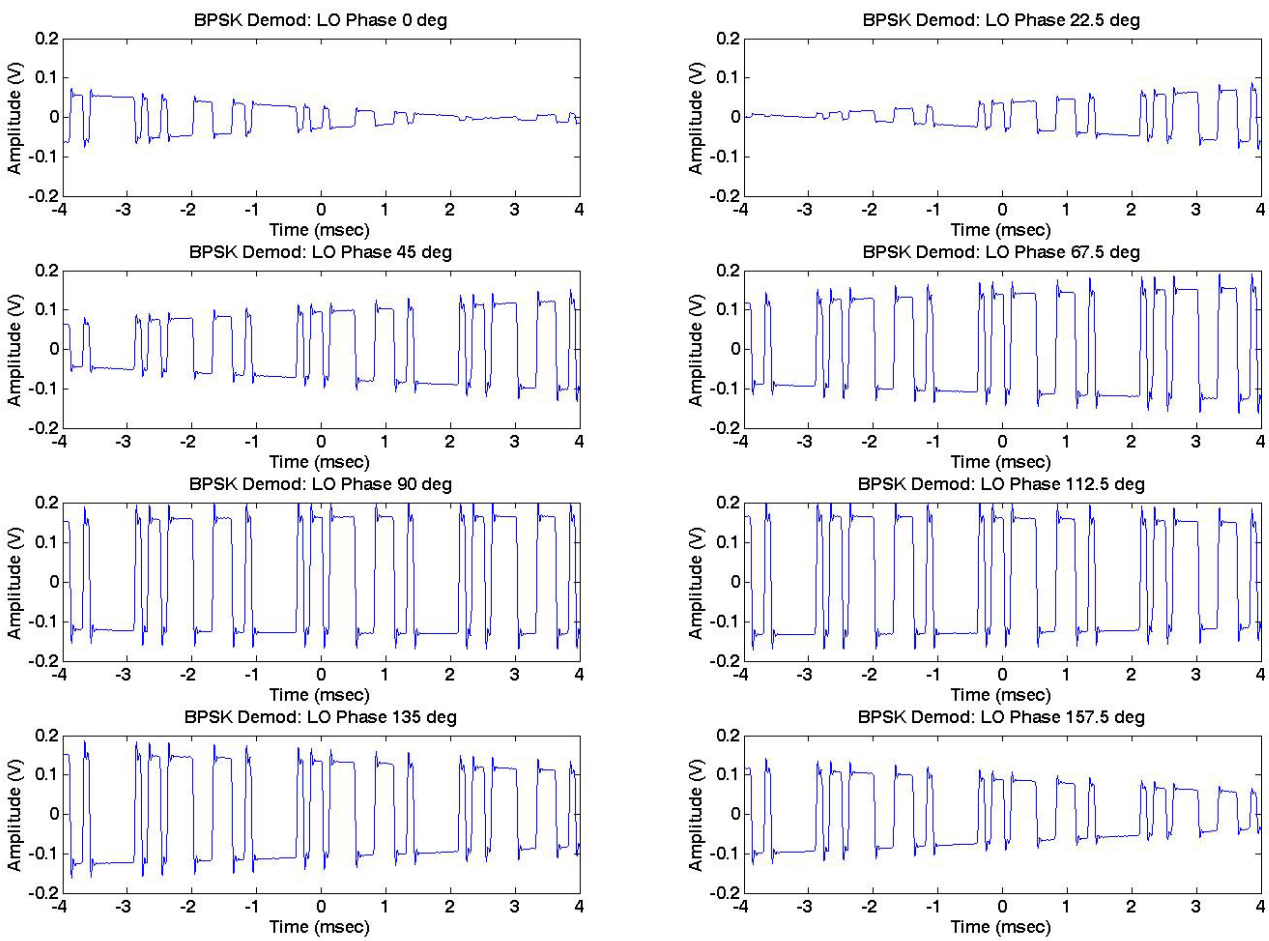

5. Finally, we will investigate the impact of noise on BPSK signals. Connect the output of the BPSK generator to one input of a BNC T connector, connect the noise generator to the other input of the BNC T connector, and connect the output of the BNC T to Channel1 of the oscilloscope. Configure the Noise generator to produce a noise waveform with an output power of -10 dBm.

6. Turn the noise generator ON, and capture the noisy BPSK signal on the Oscilloscope. Using your Matlab demodulation routine (you will need to repeat the phase synchronization part, as you will be capturing your BPSK signal with a slightly different phase), demodulate and visually identify the bits. Include a copy of the noisy spectrum and demodulated bits with your report.

7. Repeat steps 6 for noise power levels of 0 dBm and +10 dBm.

Compare the performance of ASK, FSK, and BPSK. Which system performed the best in the presence of noise, and why?

_____

_____

_____

_____

_____