Microprocessor-Based Systems Design*

Charles B. Cameron

24 October 2008

1 Components of a Digital System

A microprocessor-based system can have digital or analog inputs and outputs. Figure 1 on the following page shows the components of such a system, which are described in the paragraphs below.

Processor The processor is at the heart of any digital system that uses one at all. It accepts analog data in digital format, manipulates the data in some suitable way, and then generates more analog data as output. In addition to this signal-processing function, the processor will handle interactions with the user through input and display devices, it will store data in memory and then retrieve it again, and it may communicate with other systems as well.

Memory The memory is used to support the system's functions. It is common for the system to store large amounts of analog data in digital form and manipulate the stored values. The amount of memory needed is strongly dependent on the purpose of the system.

Input transducers The transducers convert some physical variable into an analog electrical signal. As an example, a strain gauge may generate a voltage proportional to the force applied to the gauge.

Input signal conditioners and lowpass filters No matter what electrical levels are produced by input transducers, they seldom are appropriate for the digital system, which commonly needs voltages in the 0 V to 5 V range. The signal conditioner is responsible for altering the input analog signal to this range. In addition, high-frequency components of the input signal are usually regarded as noise and are stripped off by a lowpass filter in order to minimize their effects on the system. Furthermore, the digital sampling done subsequently absolutely requires this step in order to avoid aliasing.

*Course notes for EE361 Microprocessor-based Digital Design

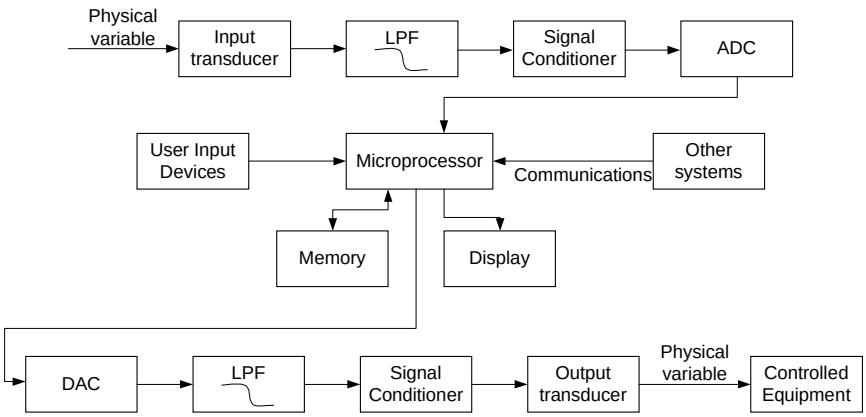

Figure 1: Block Diagram of a Microprocessor-Based System

Analog-to-digital converter (ADC) This component converts the analog signal generated by the Signal Conditioner and Lowpass Filter into a digital signal. It does this by sampling the analog signal at a uniform rate first. Shannon's sampling theorem[2] states that if a signal has no frequency components above $f_{max} = f_s/2$ then it can be completely reconstructed from samples taken at frequency f_s. Turning this around, we can get useful samples at frequency f_s by ensuring no frequencies are present at $f > f_s/2$, and we can accomplish this with a lowpass filter whose bandwidth $B = f_s/2$. The output of the analog-to-digital conversion process, then, is a digital representation of a band-limited analog signal.

Microprocessor program The program is responsible for the processing of the analog data stream (the signal processing) and for the operation of the system itself. It is common for there to be two (or even more) microprocessors in a system so that signal processing and system operating programs are then distinct.

Communications It is also common for a system to have the ability to pass data to another device, often another system. A common interface for systems is the IEEE 488.2/GPIB/HP-IB instrumentation bus, specially designed for instruments.[1]

Display devices These can range from simple light-emitting diode (LED) indicators to cathode ray tubes (CRT). They can indicate the status of the system or render the signal into a graphical form.

Input devices Common input devices are keypads, potentiometers, optical shaft encoders, and switches. More elaborate devices are those familiar to computer users: mice, digitizing pads, joysticks, and light pens.

Digital-to-analog converter (DAC) After manipulating the signal in some fashion appropriate to the application, it is common for the system to

create an analog signal. An example of this is the generation of a video signal for operating a CRT or an audio signal to operate a loud speaker. By feeding signal samples to a DAC at regular intervals, an analog signal can be completely reconstructed from the samples if it represents a band-limited signal.[2] The analog output may represent a complicated signal, such as an audio signal or it may be something much simpler, such as a control signal for positioning a mechanical arm.

Output signal conditioners and lowpass filters The output of a DAC commonly entails voltages between 0 V and 5 V. This is often an inappropriate level for operating a particular device. The signal conditioner makes the adjustments necessary for getting the analog output signal into the right range of values. A lowpass filter is also necessary in this stage in order to remove the vestiges of the sampling process. If this is not done, then frequency components of the output signal will include the sampling frequency f_s. The lowpass filter should remove this frequency and everything above the band-limited signal whose maximum frequency is $f = f_s/2$. An excellent book on modern filter design is Schaumann and van Valkenburg.[3]

Output transducers (actuators) These devices convert an analog electrical signal into some other physical form. For example, a loud speaker is a transducer which converts an analog electrical signal into an audible sound wave by using an electromagnetic to move a large cone back and forth rapidly. As another example, a fan may interpret analog control signals of varying currents by turning the blades of the fan faster or slower. Finally, a piezoelectric crystal such as quartz will change its size when subjected to different voltage levels and so can be used to move items over a very small distance.

Controlled equipment Sometimes the distinction between an output transducer and controlled equipment is blurred. However, one might well regard an entire robotic system as controlled equipment which itself contains multiple output transducers.

References

[1] *IEEE-488 Interface Bus (HP-IB/GP-IB)* (n.d.). Retrieved March 19, 2002 from `http://ewhdbks.mugu.navy.mil/ieee-488.pdf`.

[2] Shannon, Claude E., "A Mathematical Theory of Communication", *Bell System Tech Journal*, vol. 27, pp. 379-423 and 623-656, University of Illinois Press, July and October, 1948.

[3] Schaumann, Rolf and Mac E. van Valkenburg, *Design of Analog Filters*, New York, Oxford University Press, 2001.