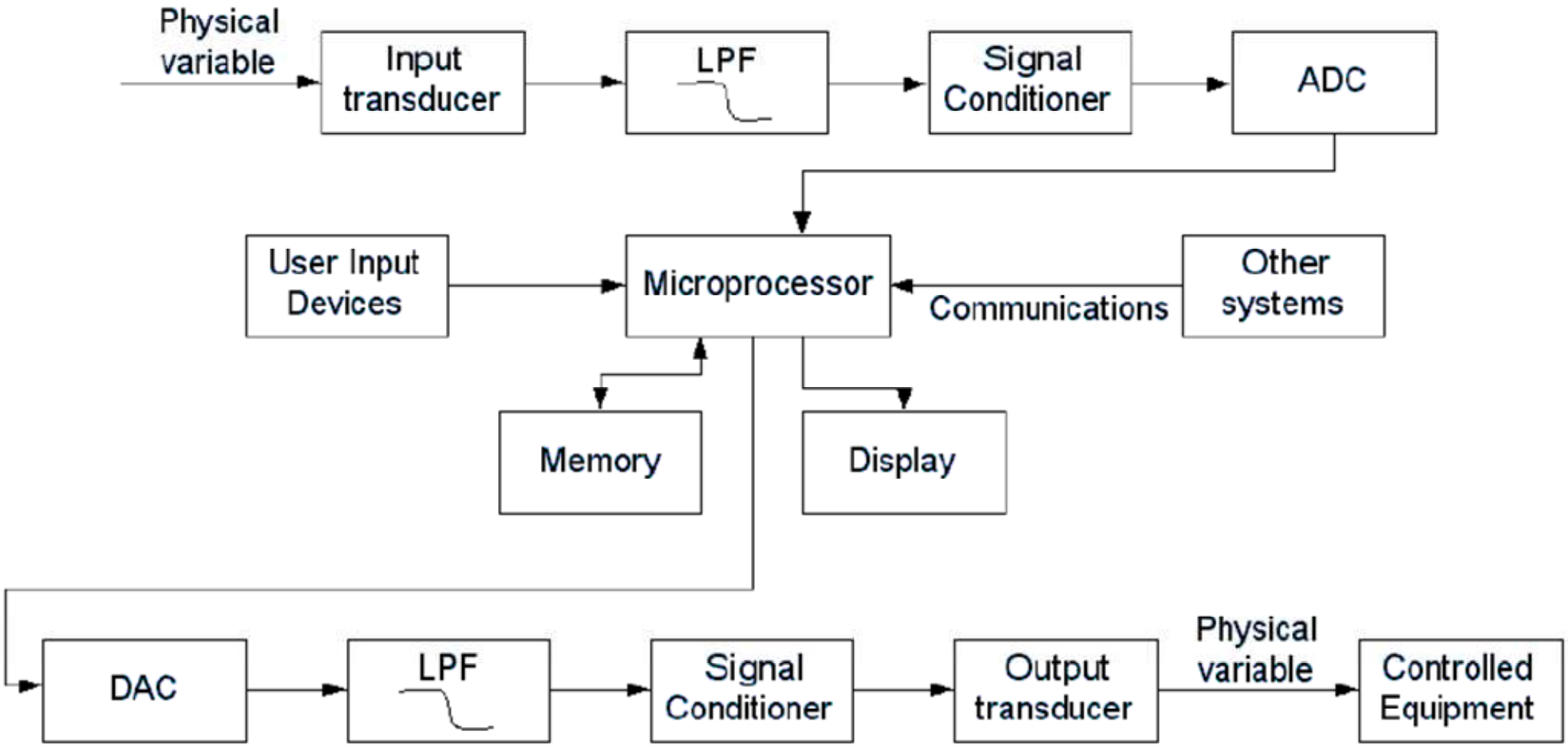
Physical variable
Input transducer
LPF
Signal Conditioner
ADC
User Input Devices
Microprocessor
Communications
Other systems
Memory
Display
DAC
LPF
Signal Conditioner
Output transducer
Physical variable
Controlled Equipment

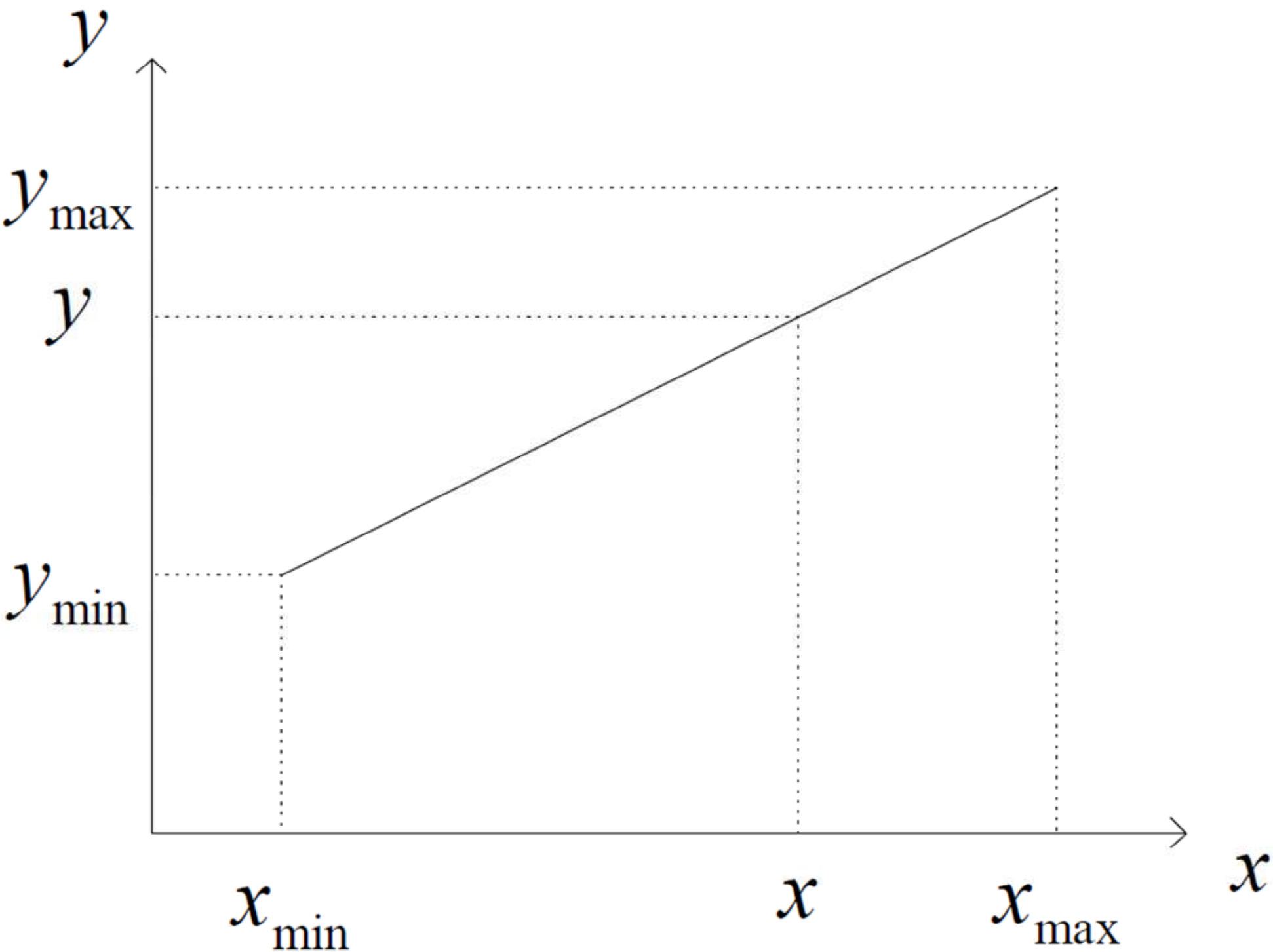
y
y_{max}
y
y_{min}
x
x_{min}
x
x_{max}

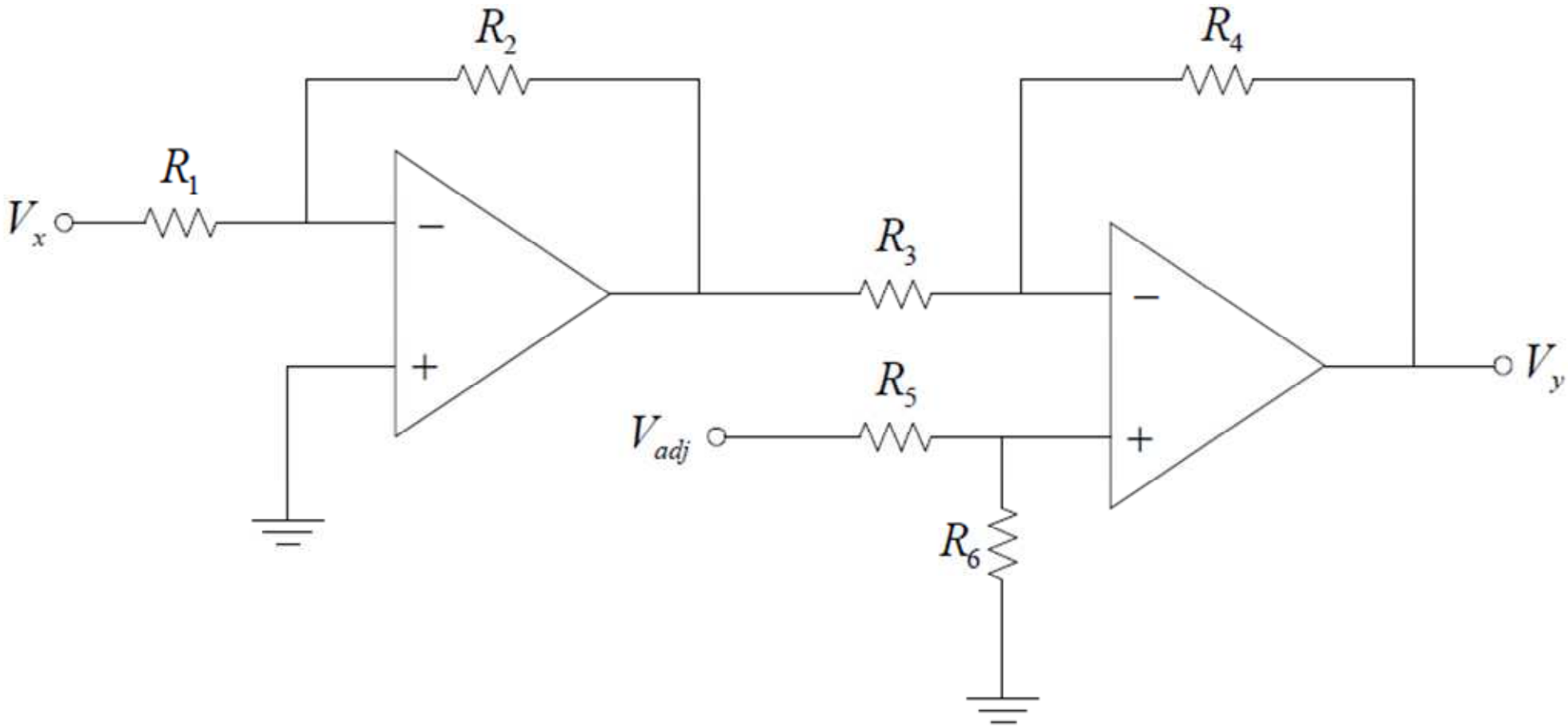
R_2
R_4
R_1
V_x
R_3
V_y
R_5
V_{adj}
R_6