Fig 4.7 The ALU and Its Associated Registers

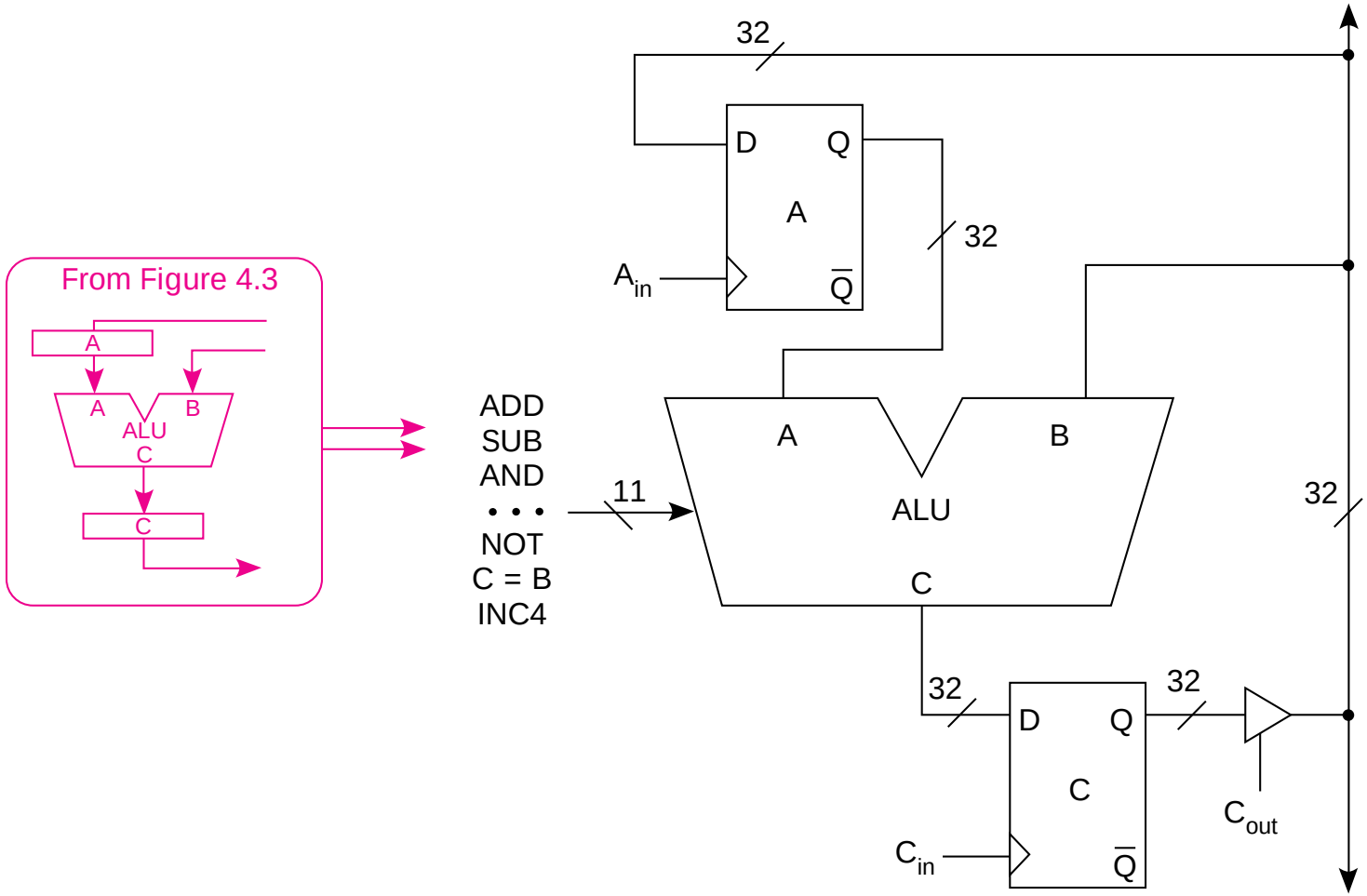

© 1997 V. Heuring and H. Jordan