Fig 4.6 The CPU–Memory Interface: Memory Address and Memory Data Registers, MA<31...0> and MD<31...0>

- **MD is loaded from memory or from CPU bus**

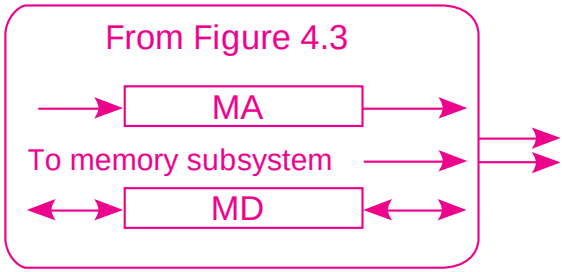

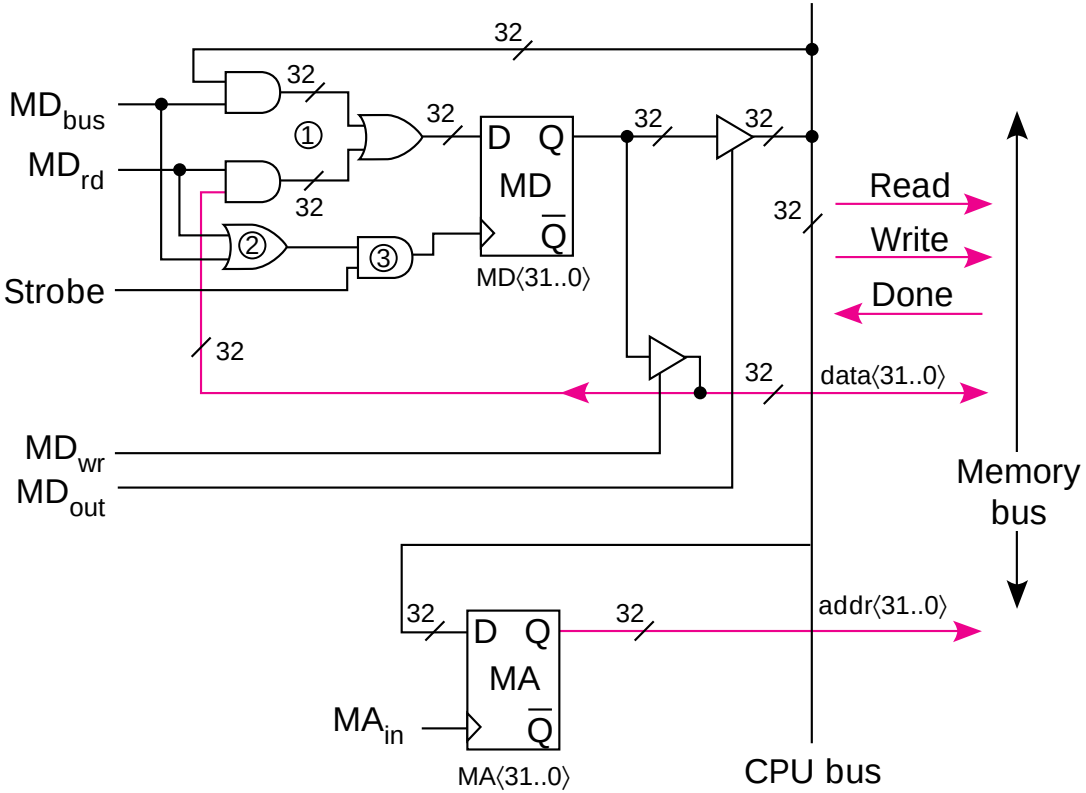

- **MD can drive CPU bus or memory bus**

© 1997 V. Heuring and H. Jordan