EE411 PROJECT CONCEPT PRESENTATION EXPECTATIONS

Assoc. Prof. Firebaugh

September 22, 2011

What is the purpose?

- To “sell” your project concept – you need to convince your audience that..
  - Your project addresses a need or want.
  - You understand the problem.
  - You’ve considered all reasonable solutions.
  - You’ve chosen the best solution for the available time and resources.

Proposal Defense Content

- Problem statement
- Design objectives
- Technical requirements
- Functional decomposition
- Design alternatives
- Evaluation of design alternatives
- Summary of the project to date

Format Tips

- Use 18 point font or greater.
- Use landscape mode not portrait.
- Use color and fancy graphics sparingly.
- Do not use PowerPoint "CPU Wasters" like spiraling text or frivolous visuals.
- 10 bullet items per page maximum.
- Be careful of the colors you use.
- Do use PowerPoint to introduce bullet items one at a time.
- Check speling and Use of Capitalization.
- Wear service dress uniform.

Avoid Death by Powerpoint

- One main point per slide.
- Stick to schedule– no more than 15 minutes.
- Make the presentation visually attractive.
- Use figures when you can (if they tell a story)
- Use other visual aids if applicable.
- Look at your audience, not at the screen.
- Be animated. Move around the room. Project energy.
- Practice practice practice.
- Example?

THE VISUAL AID:

ENHANCING THE MOBILITY OF THE VISUALLY IMPAIRED*

*MODIFIED FROM A DESIGN PROJECT CASE STUDY IN *DESIGN FOR ELECTRICAL AND COMPUTER ENGINEERING*, BY FORD AND COULSTON, MCGRAW-HILL HIGHER EDUCATION; BOSTON, MA; 2008.

H. Lamarr, A. Turing, J. Maxwell

October 26, 2010

The Need

- Current mobility resources for visually impaired are limited or too expensive.
  - Only 1% use guide dogs.
  - Canes miss objects like tree branches or small surface changes like doorsills or cracks.
  - Options like “LaserCane” cost >$2500
- The goal of this project is to design and implement a system that gives visually impaired people an enhanced awareness of their surroundings. The system will detect objects and provide real-time feedback according to the size, position, and distance of the object.

Objectives

Easy to use	Intuitive	Intuitive controls	
		Intuitive feedback	
	Accurate		
	Impervious to weather	Water resistant	
		Temperature insensitive	
	Operates continuously		
	Doesn't interfere with user function	Doesn't produce distracting signal	
		Portable	Light Small
Consumer friendly	Affordable		
	Safe		
	Comfortable		

Device Requirements

- The system's total weight will not exceed 5 lb.
- The system will operate on full charge for at least 3 hours.
- The system should not exceed $500.
- The system should not produce noise exceeding 40 dB.
- The system will be built with components that can operate in temperatures ranging from -80°F to 135°F.
- The system will be water-resistant.
- The system will have a single control to turn it on/off.
- A prototype system could be built within the next 7 months.

Device Requirements, cont.

- Uneven surfaces (steps, rocks) with features that are at least +/- 1” high will be detected at a distance of at least 3 ft. away from the user.
- The system will detect objects that are at least 1” wide and 2” high, at least 3 ft from the user and no more than 7 ft from the user, in a 2 ft wide area.
- When objects are detected, the system should provide sensory feedback that is distinguishable from other sensory signals experienced by the user.
- The system should scan the environment and refresh its output at least 6 times per second.
- The system should not restrict the user’s mobility.

Functional Decomposition

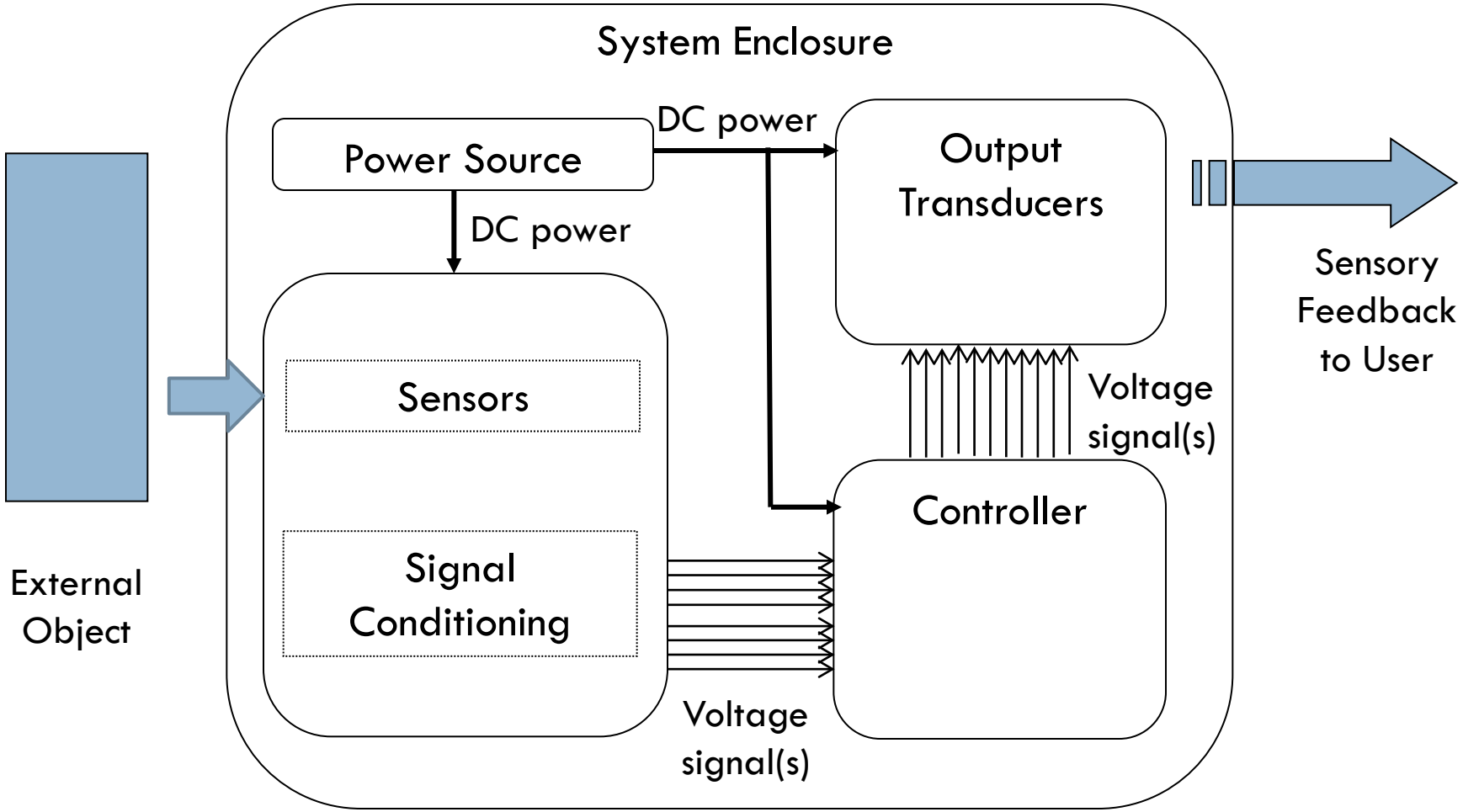

Design Alternatives

Feature/ Function	1	2	3	4
Enclosure	Handheld unit	Wearable hands-free unit		
Sensors	Ultrasonic	Infrared LED – based sensors	Laser	Radar
Controller	FPGA	PIC or other standalone microprocessor	Droid	Laptop
User feedback	Sound	Haptic array	Retinal implant	
Power source	Rechargeable batteries	Shoe power scavenging	Solar	

Narrowing the Design Space

- Some options immediately eliminated:
  - Incorporating radar too expensive.
  - Incorporating a Laptop would be too heavy and overkill for processing needs.
  - Droid not as easily integrated with sensors and actuators as FPGA or microprocessor.
  - Retinal implant is crazy talk.
  - Shoe power or solar addition would supplement batteries and could be added later.

Design Alternatives

- Design 1: The Baton
  - Contains ultrasonic array, batteries, and PIC microprocessor or FPGA.
  - Communicates via bluetooth with an ear piece.
  - Produces a series of beeps at a rate that is proportional to the ultrasonic sensor output.
  - User localizes objects by sweeping the baton.

Design Alternatives

- Design 2: The Vest
  - Contains larger ultrasonic array, and downward-angled infrared laser sensors on front and haptic array of pager vibrating motors on back.
  - Ultrasonic sensors detect general objects in the user's path
  - Lasers detect uneven surfaces.
  - Vest also contains batteries and microprocessor or FPGA.
  - Motors vibrate according to orientation of object to the user (high and on the right if the object is off of the users right shoulder, for example), at an amplitude that is inversely proportional to distance.

Design Alternatives

- Design 3: The Cyclops Eye
  - Headband with ultrasonic range finder and infrared diode laser directed out from forehead.
  - Ultrasonic range finder detects that object is in vicinity.
  - User can use his/her head to better direct the laser beam and localize the object via a reflectance measurement.
  - Communicates via bluetooth with an ear piece.
  - Produces a series of beeps at a rate that is proportional to the proximity of the object

Design Selection Criteria

- **Accurate**
- **Doesn't interfere with user functions**
- **Intuitive**
- **Affordable**
- Impervious to weather
- Operates continuously
- Safe
- Comfortable

Decisive objectives

Less important or capable of being incorporated into any design option

Design Selection Criteria

- Accurate
  - Accuracy relative to cane

Worse than cane	0 points
Comparable to cane	50 points
Better than cane	100 points

- Non-interfering
  - Level of interference with regular activity

User motions and senses severely restricted	0 points
Motions and/or senses moderately restricted	50 points
User has full use of body and senses	100 points

Design Selection Criteria

- Affordable
  - Cost of Parts

>$500	0 points
$400-$500	20 points
$300-$400	40 points
$200-$300	60 points
$100-$200	80 points
<$100	100 points

- Intuitive
  - Training time anticipated

days	0 points
hours	50 points
< 1 hour	100 points

Design Selection

Objective	Weight	The Baton	The Vest	Cyclops Eye
Accurate	0.4	50x0.4 = 20	100x0.4 = 40	100 x 0.4 = 40
Non-interfering	0.3	50x0.3 = 15	100x0.3 = 30	50x0.3 = 15
Affordable	0.2	60x0.2 = 12	20x0.2 = 4	40x0.2 = 8
Intuitive	0.1	50x0.1 = 5	100x0.1 = 10	50x0.1 = 5
Total		52	84	68

“Vest” design selected for further development

Summary

- The “Visual Aid” addresses a need in the handicapped community for a better alternative to the cane and seeing-eye dog.
- Vest design selected for further development.
- Vest should be capable of meeting all design requirements.