The Visual Aid: Enhancing the Mobility of the Visually Impaired

(modified from a design project case study in *Design for Electrical and Computer Engineering*, by Ralph Ford and Chris Coulston, McGraw-Hill Higher Education; Boston, MA; 2008

MIDN 1/C H. Lamarr
MIDN 1/C J. Maxwell
MIDN 1/C A. Turing

September 25, 2010

1. INTRODUCTION

1.1 Purpose

Visually impaired people often have mobility difficulties due to limited spatial sensing—determining where objects are. Although many receive education in mobility techniques and enhance other senses to create better awareness of surroundings, there is a need for a more accurate spatial description. For example, visually impaired people are able to detect walls because of different sounds in the environment. However, a tree branch, stairs or a street sign may be undetected. As a result, many devices have been designed to detect objects in the path of a visually impaired individual. Common mobility resources are guide dogs, canes, and electronic travel aid (ETA) devices. Unfortunately, these resources are either limited or too expensive. There is a need for a device to provide an effective way to detect objects and be cost-efficient.

The goal of this project is to design and implement a digital system that gives visually impaired people an enhanced awareness of their surroundings. The system will detect objects and provide real-time feedback to the user according to the size, position, and distance of the object.

1.2 Background

For over 30 years, people have been attempting to invent an electronic device to help the blind navigate. According to the American Foundation for the Blind [1], there are about 10 million blind and visually impaired individuals in the United States.

According to The Seeing Eye [2], an organization committed to train dogs for the blind, around 1% of the visually impaired use guide dogs. Many do not choose this option because of allergies, facilities needed for dog care, training for both the dog and the individual, and finally, personal preference. The rest of the blind community relies on canes, electronic travel aids (ETAs) and their perceptual senses.

The cane is the most popular tool for object detection for the blind. Nevertheless, this tool is limited, as it is difficult to locate objects that are not at the ground level. For example, a tree branch will go undetected by an individual using a cane. However, there are ETAs designed to overcome this problem. The most popular ETA is a cane that contains built-in laser sensors for object detection called the LaserCane [3]. This system integrates laser sensors near the handle for the cane and detects objects in three different angles. This system provides feedback to the user by sound or by vibrations produced on the side of the cane sensed by touch. Although this design offers the blind more resources to identify possible objects in front, it has limited feedback. For instance, the laser sensors fire a beam so narrow that users must master the movements of the cane in order to detect objects accurately. Moreover, this device costs around $2500, which causes an attainability issue for many visually impaired.

According to the director of the Vision and Blindness Resources Center in Erie—who was interviewed as part of this project's research—the visually impaired are trained to orient themselves and navigate by using their senses. However, major difficulties arise from objects that cannot be sensed. Therefore, the basic mobility needs of the visually impaired consist of object detection with a range of approximately 1 meter from the body, as a minimum, over a 2 foot wide by 6.5 foot tall swath of space (the approximate width and height of an adult body). Examples of the objects that should be detected include chairs, steps, and tree branches. In an

interview, a visually impaired student on campus who used a guide dog said that surface differences of approximately 2 inches should be considered dangerous, and must be detected by the ETA system.

To meet the needs and common hazards that the visually impaired encounter, key characteristics must be carefully addressed when designing this device. First, the sensing system must be able to detect objects of varied sizes and cover a wide range. Second, the controls and feedback from the system should be intuitive for the user. The system needs to operate inside and outside, and it should operate continuously. It should not restrict the user or interfere with the ability of the user to hear other things of interest in his or her surroundings. Also, the system must be affordable, safe and comfortable. Research shows that no single device meets all these needs, and none has been widely accepted by the blind community.

1.3 Ethical, Global and Societal Context

This project involves the development of a device that will monitor the environment around the user for obstacles and warn the user of their location. It is an alternative to a cane or a seeing-eye dog. If the product works as intended, it would create a significant benefit for the user, particularly for users who are unable or unwilling to use a guide dog. It should be able to better detect obstacles than a cane and provide clearer feedback to the user as to the nature of those obstacles. By enhancing the mobility of the visually impaired and improving the ability of these citizens to productively contribute to the community, this project would also benefit society.

There is some cost as well. A traditional cane requires no external power source, but the Visual Aid requires electrical power (estimated to be ~8W) which is provided through rechargeable batteries, and ultimately might derive from non-renewable sources of electricity. Even the modest power needs of this device could cause measurable resource depletion if the technology were widely adopted. If a tenth of the visually-impaired population (estimated to be about 10 million people) were to use the Visual Aid, the collective additional power use would be 8 MW, or an annual power usage (assuming that the device is used 2 hours/day on average) of 21 x 1012 J. This is the equivalent of 600,000 gallons of gasoline or 800 tons of coal. However, if the device were so widely adopted, that would also be an indicator that it provided its users with substantial benefit to their lifestyle.

There is also an ethical duty on the part of the designer to make the device safe. In particular, the device must operate reliably as planned. For example, if the device were prone to sporadic failure in certain conditions, or if it had blind spots where objects could go undetected, then a user might be injured. Therefore, the developer has a duty to thoroughly test the device in every context in which a reasonable person might use it before it is offered for sale. Anyone selling this device would also have a duty to ensure that users were sufficiently trained in how to operate the device.

1.4 Objective Tree

The design objectives are embodied in the objective tree shown in Fig. 1-1. The most important objectives are that the device be easy to use and consumer-friendly. Ease of use implies that it must be intuitive, accurate and weather resistant, and it must operate continuously and not interfere with other user activities. To be consumer-friendly it should be affordable, safe, and comfortable. These objectives are further broken down in the table below.

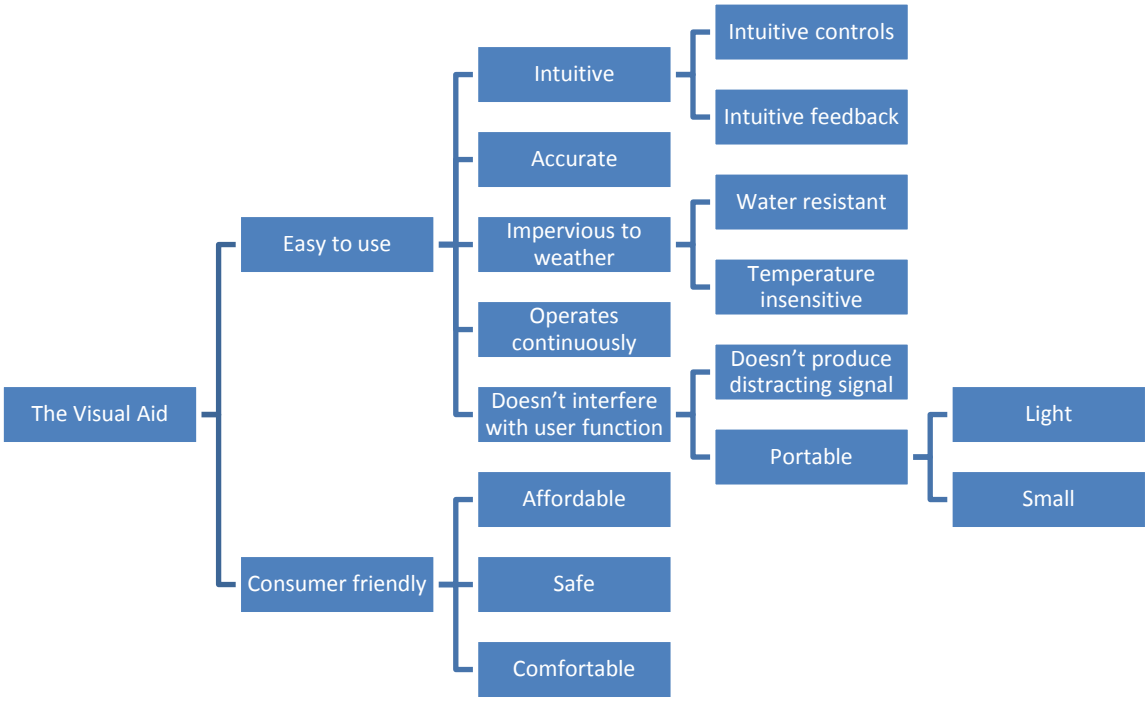

Figure 1-1: Objective tree for visual aid

1.5 Requirements

Taking into account the user needs and the findings of the research survey and guided by the objective tree, the following requirements were determined for the device:

a. The system's total weight will not exceed 5 lb.

This is a typical weight for other portable devices such as laptops and book bags, and therefore would be a reasonable weight for such a device.

b. The system will have a single control to turn it on/off.

This is based on the user's need for the system to be as simple and intuitive as possible.

c. The system will operate on full charge for at least 3 hours.

This is based on expected daily use. The average person walks for 20 minutes each day [4], but there can be great variation according to need. Three hours provides a safety factor of nearly ten.

d. The system should not exceed $500.

This will set the system cost well below that of competing devices such as the LaserCane [3].

e. Uneven surfaces (steps, rocks) with features that are at least +/- 1" high will be detected at a distance of at least 3 ft. away from the user.

In the research survey, a potential user identified a 2” surface variation as being dangerous. Preliminary experiments indicate that variations as small as 1” can cause tripping.

f. The system will detect objects that are at least 1” wide and 2” high that are at least 3 ft from the user and no more than 7 ft from the user in a 2 ft wide area immediately in front of the user. Such objects should include street signs and posts.

This requirement is based on the user’s needs to be notified of hazards. The distance of 3 ft provides the user with adequate time to respond to the hazard. However, the system should not respond to hazards that are far away as this might confuse the user. This set the 7 ft upper limit.

g. When objects are detected, the system should provide sensory feedback.

To be useful, the device must not only detect hazards, but also warn the user of their presence.

h. The system should not produce noise exceeding 40 dB.

The system should not produce noise that would annoy the user or interfere with his or her ability to hear other sounds of interest. The 40 dB limit is based on typical sound levels in office and living room environments [5].

i. The system will be built with components that can operate in temperatures ranging from -80ºF to 135ºF.

The system must operate outside. This range spans the record low and high outdoor temperatures within the United States [6, 7].

j. The system components will be enclosed to be water-resistant.

The system must still function in the presence of rain, snow, and high humidity.

k. The system should scan the output and refresh its output according to sensor readings at least 6 times per second.

The system should be faster than the average reaction time of humans (0.19 s) [8].

l. The system should comply with ISO 23499:2012, which is a standard maintained by the International Organization for Standardization [9].

The standard specifies the safety features and tactile signal characteristics that should be incorporated by such a device. Most of these features are out of the scope of a prototype and would only apply to the commercialization of the product. The additional aspects of this standard are met by the requirements above.

1.6 Scope

This project will focus on the design and construction of the prototype for an electronic travel aid. Testing will be limited to establishing functionality and will not encompass the lengthy testing protocols necessary for certifying a commercial medical product.

2. THE DESIGN

2.1 Functional Decomposition of System

A block diagram for the system is shown below in Figure 2-1.

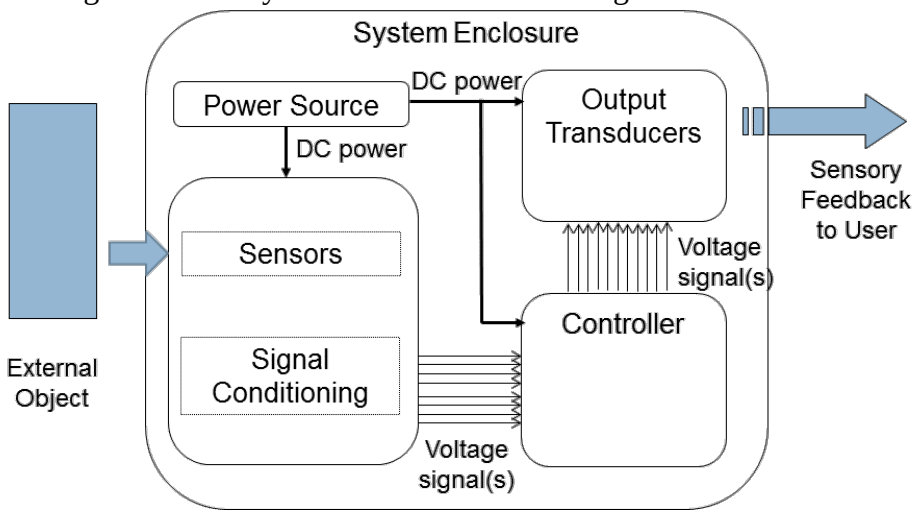

Figure 2-1: Block diagram for Visual Aid, illustrating the major systems.

The "inputs" to the system are objects in the path of the user, and the output is a signal that tells the user about those objects relative location and size. The system itself must be contained in some sort of enclosure, and it must contain sensors, processing capability, and output transducers, as well as a power supply.

2.2 Design Alternatives

Some of the design options posed by this project can be summarized by the morphological (or "morph") chart given in Fig. 2-2.

Feature/ Function	1	2	3	4
Enclosure	Handheld unit	Wearable hands-free unit		
Sensors	Ultrasonic	Infrared LED – based sensors	Laser	Radar
Controller	FPGA	PIC or other standalone microprocessor	Droid	Laptop
User feedback	Sound	Haptic array	Retinal implant	
Power source	Rechargeable batteries	Shoe power scavenging	Solar	

Figure 2-2: Morph chart for some of the system components of the visual aid.

Some of the design options in the morph chart could be eliminated immediately. For example, it is impractical to implement radar or a retinal implant. Also the incorporation of a laptop would be prohibitively expensive and heavy. Shoe power scavenging and solar power recharging could be added at a later date but would unnecessarily complicate the prototype design. After exploring the design space, three design options were considered in more detail.

2.2.1 Design A: The Baton

One option for the device is to directly replace a cane. The system or a portion of the system could be enclosed in a handheld bar with which the user would sweep the environment. The bar contains ultrasonic sensors that provide the instrument with information on the size and distance of foreign objects. An advantage of such a system might be that the user might more readily accept a new device that looks like an established system. Also, in this case the user would provide a means for sweeping the entire area of interest or for focusing on an area of particular interest.

However there are also significant disadvantages to a hand-held device. The palm interface does not provide a large area for tactile feedback, so this design incorporates audio feedback via a Bluetooth earpiece. In order to not be too distracting for the user, the signal is a series of pulses that increase in frequency in the proximite of an object—similar to a metal detector. With training, the user could get used to the background sound of this device and still hear other sounds in his or her environment, but it would still be a distraction. The need to constantly hold the device could also be tedious for the user and would interfere with the user's ability to use his or her hands for other purposes. Finally, if the sensing area depends on the user's sweep pattern then the device requires more training and more attention from the user, although the extent and training is probably equivalent to a cane.

2.2.2 Design B: The Vest

The next option for consideration involves a wearable vest. The front of the vest would contain an array of ultrasonic range sensors which would provide general location and size information about objects in the vicinity of the user. It also contains a downward-directed infrared laser diode which provides more specific information on changes in the walking surface. Feedback to the user is provided through an array of vibrating pager motors on the users back. The location in the array of the vibration gives the user an indication of object orientation, and the amplitude of the vibration would indicate size. So, for example, if the user encounters a stair, the entire bottom row along the user's back would vibrate, while a hanging tree branch would cause some of the sensors on the user's shoulders to vibrate. Signal processing capability would be provided by a microprocessor (or FPGA, although the latter is more expensive and higher power) incorporated into the vest, along with a battery power supply.

This design would be more intuitive and easier to use than the Baton, and would also provide more information about the user's environment. It may be uncomfortable to the user and also might restrict the user's wardrobe. To facilitate use both summer ware and a heavy coat, it might need to consist of two vests—one that is worn outside the clothing and contains the sensors, and another that is worn under the clothing with the haptic array. The two parts would then require an additional connection, either via wireless interface or with a cable. This might

interfere too much with the user's comfort or fashion sense. If the device is useful enough, however, the user may be willing to set aside those reservations.

2.2.3 Design C: The Cyclops Eye

The final option would be a sensor system that could be incorporated into a hat or headband. This system is similar to the vest in that it contains both ultrasonic and laser sensors for general object detection as well as the detection of uneven walking surfaces. It doesn't sample as large of an area as the vest sensor, but the user can direct this sensor system by turning his or her head. Feedback to the user would be through an earpiece like the one described for the baton.

This would interfere less with the user's clothing selection, and allow the user to direct attention to a particular direction if desired. It would require about as much training as the baton for use, and would leave the user with his or her hands free, however it might be distracting for the user to need to scan his or her head.

2.3 Objectives and Metrics to Use for Design Selection

Selection was based on the objectives of accuracy, non-interference, affordability, and intuitivity. Safety, weather resistance and continuous operation are important objectives, but they could be equally well met by any of the designs described. Comfort is also important but difficult to measure without the use of focus groups. Metrics were then determined for the four objectives used in the selection process.

2.3.1 Metric for Accuracy

Accuracy was roughly measured using a comparison to the anticipated performance of the design relative to the classic cane, described in Table 2-1. By this measure, both the vest design and the "Cyclops Eye" are clearly superior, while the baton is comparable to the cane, although slightly better.

Worse than cane	0 points
Comparable to cane	50 points
Better than cane	100 points

Table 2-1: Accuracy is measured by comparison to the cane.

2.3.2 Metric for Non-interference

Non-interference was also roughly measured, as described in Table 2-2. A device which leaves the user's motion unrestricted and which doesn't distract the user's auditory sense is a full score, whereas severe restriction and distraction has a low score. By this measure, the vest design is clearly superior to both the wand and the "Cyclops Eye," which both somewhat restrict motion and use auditory feedback.

User motions and senses severely restricted	0 points
Motions and/or senses moderately restricted	50 points
User has full use of body and senses	100 points

Table 2-2: Metric for non-interference

2.3.3 Metric for Affordability

Affordability is more easily measured, as described in Table 3-3, using an estimate of the total parts cost for the design. The baton, which involves the fewest number of sensors is clearly the least expensive design, while the vest, which has more sensors as well as the more expensive haptic array for feedback, would be the most expensive.

>$500	0 points
$400-$500	20 points
$300-$400	40 points
$200-$300	60 points
$100-$200	80 points
<$100	100 points

Table 2-3: Metric for affordability

2.3.4 Metric for Intuitive Use

This is measured by the amount of anticipated training time necessary for a user to learn how to operate the device, as shown in Table 2-4. The Vest is considered the most intuitive design, although all three systems could probably be learned within a day.

days	0 points
hours	50 points
< 1 hour	100 points

Table 2-4: Metric for intuitivity

2.4 Pugh Selection Chart

Of the different selection charts described in class, we decided to use a weighted numerical evaluation matrix. We wanted to be able to weigh the different objectives according to performance, and we wanted a finer scale than the priority checkmark method. The resulting selection chart is shown in Table 3-5.

Objective	Weight	The Baton	The Vest	Cyclops Eye
Accurate	0.4	50x0.4 = 20	100x0.4 = 40	100 x 0.4 = 40
Non-interfering	0.3	50x0.3 = 15	100x0.3 = 30	50x0.3 = 15
Affordable	0.2	60x0.2 = 12	20x0.2 = 4	40x0.2 = 8
Intuitive	0.1	50x0.1 = 5	100x0.1 = 10	50x0.1 = 5
Total		52	84	68

Table 2-5: Selection chart for design

The selection chart points to "Vest" design as the best option to develop further. This design choice makes sense also when comparing the capabilities of the design against the design requirements described in Section 1. It may also be possible to incorporate features of the "Cyclops eye" design with the vest design.

2.5 Design Overview

With this analysis in mind, the Visual Aid will consist of three major physical components: (1) a set of sensors, (2) a matrix of vibrating motors, and (3) a processing unit. These physical components are interconnected through the processing unit and are attached to the user as in Fig. 2-3 below.

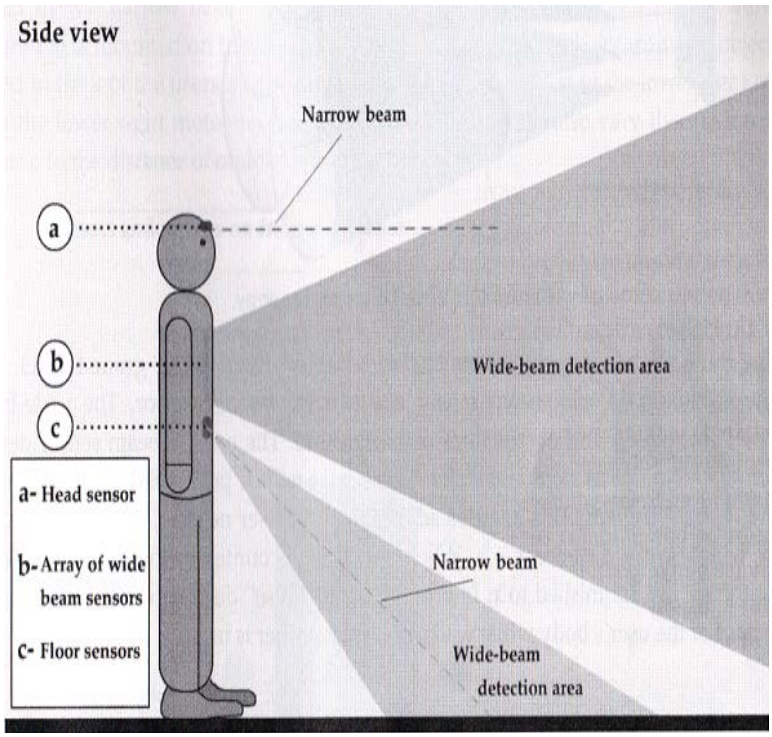

Figure 2-3: Illustration for the Visual Aid, showing how it would be used.

The set of sensors is distributed into three modules. The head module consists of a narrow-beam sensor (represented as a dashed line) mounted in the head of the user. The purpose of this module is to provide the user with accurate information regarding an objects position and distance.

The second module is a vest containing the array of six wide-beam sensors (Fig. 2-4). The use of wide-beam sensors enables the system to detect objects in a larger area. In order to give more detailed information on an object's spatial location, the sensors are arranged such that portions of their beams overlap with each other. The sensor matrix is aligned to give a wider range in the vertical orientation than the horizontal.

The third module (Fig. 2-5) detects objects at the ground level such as steps. This module consists of a wide-beam sensor and a narrow-beam sensor. The wide-beam sensor detects objects and obstructions on the ground. The narrow-beam sensor detects uneven surfaces such as steps and stairs and provides more accurate information on the size and position of the step. The sensor will be positioned with an angle that is adjustable to suit the user needs. When a step is encountered, the distance read by the sensor will change. In order to avoid the "false" detection of steps due to the movement of the user's body while walking, a digital filter will be used.

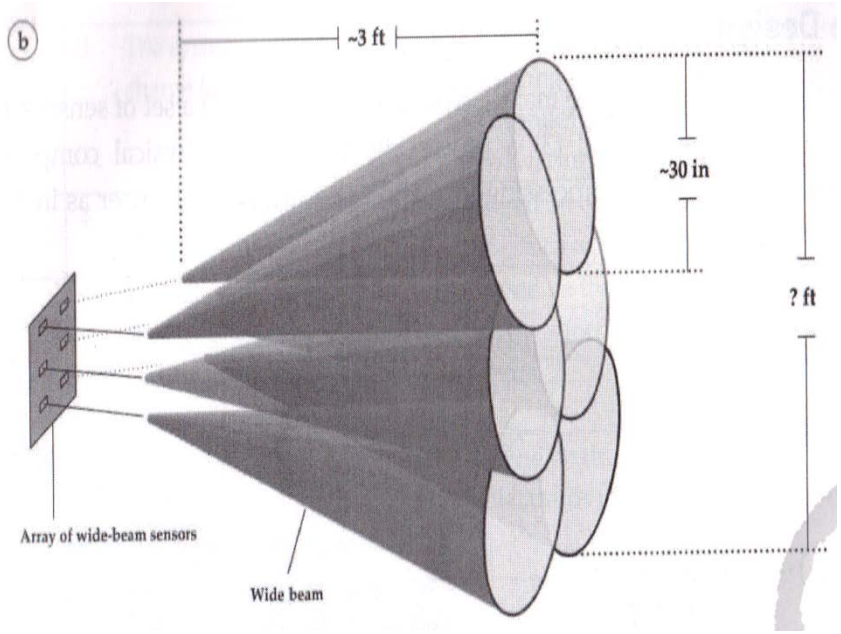

Figure 2-4: Wide-beam sensor array, worn on the user's front chest

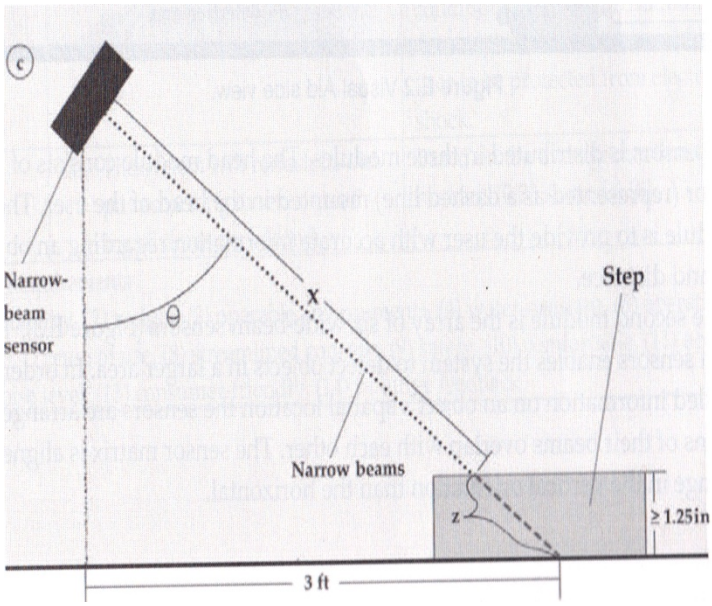

Figure 2-5: Narrow-beam sensor used as part of floor sensor for sensing step height

The second major component of the system consists of two pager vibrating motors mounted on the front area of the user (see Fig. 2-6), and 9 vibrating motors configured in a 3 x 3 matrix on the back of the user (see Fig. 2-7). The two front motors will vibrate in response to object detection by the head-mounted sensor or by the step sensor with an intensity which is proportional to the closeness of the object. The 3 x 3 matrix on the user's back provides feedback according to objects detected in front of the user. For example, if an object is detected in the lower right corner, then the lower right motor will vibrate. The matrix motors also vary their intensity according to the distance of the objects detected. If the user wished to more

accurately define the obstacle, they could do so by turning their head to direct the head-mounted sensor towards the area to get more accurate information as to object position.

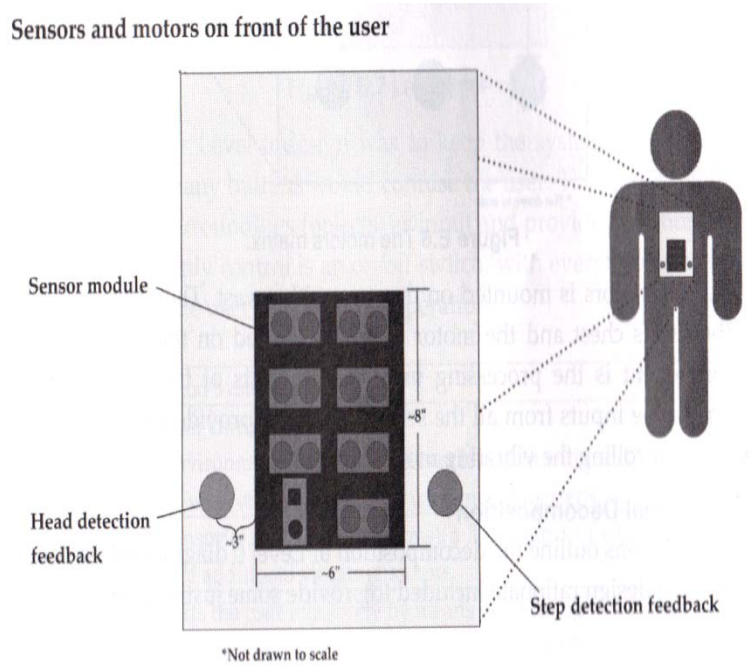

Figure 2-6: Sensors and front feedback motors for the Visual Aid

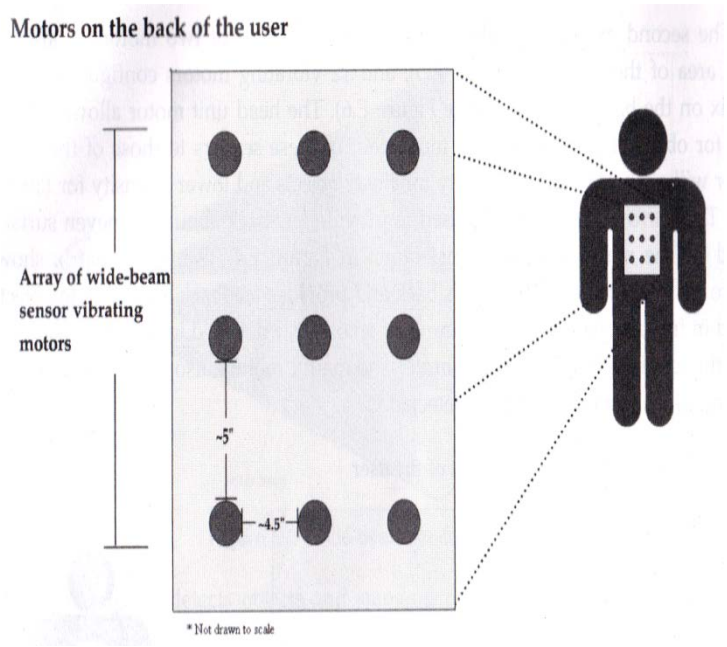

Figure 2-7: Haptic array on the user's back providing general object location information

2.6 Design Details

The details of the design are described in the following sections.

2.6.1 Enclosure

The bulk of the device is contained within the vest. The vest will be structure like a "sandwich board" that is pulled on from over the head. The structural material of the vest will be a heavy fabric such as canvas. The ultrasonic sensors will be mounted onto a thin but stiff circuit board that will maintain a constant orientation between the sensors. This board will then be sewn onto the front of the vest. The haptic array for the back will be created in a similar fashion. Ties on the side of the vest will be used to fit the vest so that the haptic array is pressed to the user's back. This prototype will not attempt to be usable over a heavy coat. If the prototype is successful the vest could be separated into two pieces—one designed to be worn under clothing with the haptic array the other to be worn over the clothing with the ultrasonic array.

The infrared range finder will be mounted separately in a headband. For the prototype the headband will connect to the rest of the unit through wires. Eventually this connection could be wireless for greater user convenience.

2.6.2 Sensors

Ultrasonic sensors are capable of detecting the area we require (range: 1 in. to 10 ft., with area of detection growing wider as distance increases [10]). Infrared sensors have a relatively narrow beam, which can be used to easily pinpoint the location of an object and also to conduct precise measurements to changes in elevation. Combining ultrasonic and IR sensors therefore allows for both a broad scan of the area and precision location of obstacles. For the ultrasonic sensors we will use something like the LV-MaxSonar-EZ1 High Performance Sonar Range Finder [11]. This sensor generates an ultrasonic signal and then measures the amount of that signal that is reflected back. The output voltage is proportional to the fraction of power that is reflected back to the sensor. For the IR sensors, we will use something like the Sharp GP2D120 [12]. The IR sensor works in a similar way as the ultrasonic sensor, but with a much more focused beam. Both types of sensors will require power for input and both will require signal conditioning circuitry to convert their output into a form that can be used by the controller unit.

2.6.3 Controller

Two types of controllers were considered: a field programmable gate array (FPGA) and a microcontroller (in particular, the PIC). While there are many other possibilities for the controller, these two options were chosen because the design team has familiarity with programming both from earlier courses. Also, the software and programming tools for using both of these controllers is already available in the senior design lab. The table below lists the advantages and disadvantages of FPGAs and microcontrollers. A microcontroller is a small computer in a single chip with components like memory and timing included. Some microcontrollers, including the PIC, include analog to digital (A/D) conversters. FPGAs simply contain millions of logic gates that can be electrically configured to perform a desired task.

FPGAs are faster and more flexible then microcontrollers, but they also consume more power and are more expensive. The chief deciding factor for this project, however, is the presence of A/D conversion on the PIC. The Visual Aid will rely extensively on analog sensors. The need for external A/D conversion would significantly complicate device design.

Table 2-6: Controller selection considerations

Method	***Advantages***	***Disadvantages***
FPGA	Flexibility Processing speed	Requires external A/D conversion Consume more power More expensive
PIC	Includes A/D conversion Less expensive Less power consumption	Less flexible Faster

2.6.4 Controller Algorithm

The PIC will read data from the sensor banks, process the data, and provide feedback control to the vibrating motor bank. A state diagram for the system is shown below in Figure 2-7. Table 2-7 describes each state in more detail.

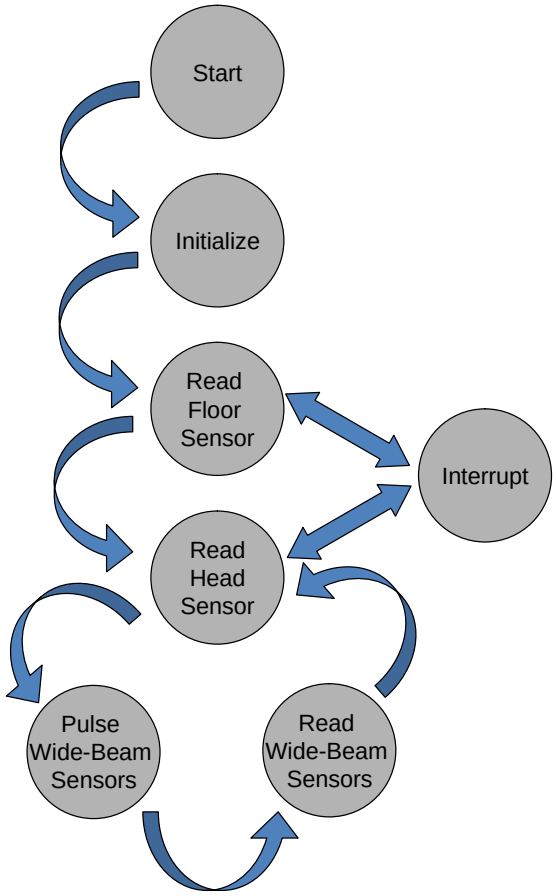

Figure 2-8: Main state diagram for the controller

Table 2-7: State details for controller algorithm

State	***Description***
Start	This is the dummy state to represent the system when it is turned on.
Initialize	This is a function that runs at the beginning of the program (upon power-up of the system) to initialize the different hardware and modules used.
Read Floor Sensor	The values read from the floor sensor unit are used to determine whether an uneven surface has been detected or not. If the surface is uneven, the system will activate the corresponding motor.
Read Head Sensor	The values read from the head unit are used to determine and set intensity at which the motor corresponding to this unit should operate.
Pulse Wide-Beam Sensors	This calls a function to pulse the ultrasonic sensors
Read Wide-Beam Sensors	The values from the wide beam sensors are used to determine the location of objects and to activate the corresponding motors.
Interrupt	This is a state to represent the various interrupts that can occur during the program. The only state where the interrupts are deactivated is in the Read Wide-Beam Sensors state. They have been deactivated because of sensitivity in the program to determine the pattern in which motors should be vibrating.

2.6.5 Actuators

There are a number of ways to incorporate haptic feedback. One method might be to use vibrating motors such as are used in cell phones and pagers. Another solution would be to use an array of air sacs that are inflated and deflated through a compressor. Finally, an array of motor-driven pins could be used to apply pressure to the user. The advantages and disadvantages of these options are listed in Table 2-8.

Table 2-8: Haptic array selection considerations

Method	***Advantages***	***Disadvantages***
Vibration Motors	Fast Medium-small footprint Can be worn over clothing layers	Relatively noisy
Pneumatic Array	Quiet	Bulky (due to air compressors) Slow
Pin Array	Quiet Smallest footprint	Uncomfortable to the user Can't be worn over thick layers of clothing

The pin array was immediately eliminated due to the potential discomfort to the user, especially in a device that is intended for long term use. Both of the remaining options, pneumatic arrays and vibration motor arrays, have been used in other devices for the blind [12, 13] and present reasonable solutions and are comparable in cost. The pneumatic array would be bulkier and slower, while the vibration motors provide a faster response but at the cost of more noise. However, the noise of the motor array would not exceed the typical noise level in an office

setting. A picture of a vibration motor is shown below with an M&M candy as a scale comparison.

Figure 2-9: Picture with scale comparison of a typical pager motor. This motor is the GM15 pager motor from Solarbotics [12].

2.6.6 Power Supply

In order to design the power supply, it is important to have an estimate of the power needs of the system. Typical voltage and current values for the components discussed above are summarized in Table 2-9 below. All of the components run in approximately the same voltage range. It's estimated that about 7.3 W is necessary, so allowing for a margin of error, 10W is the design target. For a 5 V supply, the current draw would be about 2A.

Table 2-9: Estimate of Power Needs for System

Part Description	#	Operating Voltage	Operating Current	Power Sub-Total
Ultrasonic Sensors [10]	7	2.5-5.5 V	2-3 mA	0.1 W
Infrared Sensors [11]	2	4.4-5.5 V	50 mA	0.6 W
PIC Microcontroller [14]	1	3-7.5 V	100-300 mA	1.0 W
Vibration Motors [15]	11	0.5-5 V	10-50 mA	2.8 W
			Total Power Estimate	7.3 W

The batteries should be rechargeable and readily available for the convenience of the user. Considering weight and size restrictions, power could be provided by banks of AAA, AA, C, D, or 9V rechargeable batteries. A summary of rechargeable battery characteristics is given in Table 2-10 below. The configuration is determined from the requirement that the system should operate for a minimum of 3 hours with a 2A draw. The total weight and total cost columns take the number of batteries required for each option into account. The total life column lists the lifetime with a 2A draw for the configuration.

Table 2-10: Comparison of Battery Choices for System

Battery	Voltage	Capacity	Weight	Cost	Config.	Tot. Weight	Tot. Cost	Tot. Life
AAA	1.5 V	850 mAh	13 g	$2.75	7 parallel sets of 4 batteries in series	364 g	$77	2.98 hours

AA	1.5 V	2500 mAh	30 g	$4.40	3 parallel sets of 4 batteries in series	360 g	$53	3.75 hours
C	1.5 V	4500 mAh	50 g	$6.79	2 parallel sets of 4 batteries in series	400 g	$54	4.5 hours
D	1.5 V	9000 mAh	80 g	$11.79	1 set of 4 batteries in series	320 g	$47	4.5 hours
9V	9 V	250 mAh	42 g	$10.88	24 batteries in parallel	1 kg	$261	3 hours

Looking at the table, the D battery option is clearly the best choice—it has lower total weight and cost and one of the longest total lifetimes.

In summary, each major subsystem of the design has been identified, and a reasonable method for implementing each sub-system has been identified and described.

2.7 Safety Issues

All of the elements of the design are relatively low power, but the combined estimated power draw of 2A is significant enough to result in injury. This risk will be mediated by the use of commercial, off-the-shelf, battery holders with a series fuse. Standard electrical precautions will also be taken, such as working with one hand around the battery and leaving caps on the batteries when not in use.

2.8 Relevant Standards and Regulations

Assistive products for blind and vision-impaired persons related to tactile walking surface indicators are governed by standard ISO 23499:2012, which is a standard maintained by the International Organization for Standardization. This standard provides guidance on the types of tactile feedback and safety features that must be present in a walking aid of this type. Meeting this standard has been included in the design requirements section.

2.9 Project Challenges

The greatest risk to project completion is whether the sonar array can provide sufficient resolution to detect small obstacles within the path of the user. To mitigate this risk, the project team will develop and test the ultrasonic array first. If the ultrasonic array is not able to perform

the task this will leave time for developing an alternate method such as one based on infrared sensors.

Budget limits pose another risk to project completion. The project as scoped here would require $500, which should be available through department funds. Should the current budget climate make that unreasonable, however, existing parts are available for a scaled-back system that would have a 2 x 2 ultrasonic array and no additional infrared sensors. This design requirements would also need to be scaled back as this system could not detect changes in the walking surface without the infrared sensors.

3. RESOURCES

3.1 Personnel

MIDN H. Lamarr will lead sensor development. MIDN Maxwell will assist her. They will design, build and test the circuitry to power the sensors and the circuitry required to convert the sensor output into a form that is suitable for the PIC. They are also responsible for characterizing the ultrasonic sensor response. MIDN J. Maxwell is the lead for the power system and for the haptic array, which will receive its control signals from the PIC. MIDN Lamarr will assist him. MIDN A. Turing will focus on the PIC. He is responsible for developing and implementing the algorithm that will accept the sensor signals and output signals to the haptic array. After each individual component has been tested and verified, all three midshipmen will work together to integrate the components into the enclosure and complete final testing.

3.2 Project Milestones

By the end of the fall term

- A model, using MATLAB and information from the ultrasonic sensor data sheet, of how the ultrasonic sensor array should respond to 1-ft-diameter ball placed at different points in the observation space.
- Experimental results from tests of this model. For this stage of development it is sufficient to be looking at the analog output of the 9 sensors—it is not necessary to have the array integrated with the PIC.
- Pager motors, infrared sensors, batteries and PIC should all be in hand.
- The PIC will be programmed to receive an analog input between 0 and 3.5 V and to produce a “1” if that input is above 1.5 V and a 0 if it is below 1.5 V—establishing that the group can successfully program an embedded system onto the PIC.

By 6 weeks into the spring term

- The sensor array and driver circuitry integrated on a PCB that is suitable for mounting onto the vest.
- Test results for the infrared sensor detecting a step change at a 45 degree angle and from a distance of 6’.
- The algorithm determined for how the ultrasonic and infrared signals will be mapped to the haptic array.
- The pager motors and driver circuitry should be mounted onto a board suitable for attachment to the vest.

By 12 weeks into the spring term

- The infrared sensor should be mounted in a headband.
- The PIC will be programmed to read the ultrasonic sensor signals and infrared sensor signals and produce the driver signals for the haptic array.
- The battery assembly should be complete and integrated with the system.
- The entire system will be tested with the ball placed in different spots within the observation space.

By the end of the year

- All the components of the system should be contained within the vest and headband.
- The system will be tested against all the design requirements described in section 1.4.
- The course deliverables (paper, presentation, spirit spot, poster) will be complete.

3.3 Work Schedule[1]

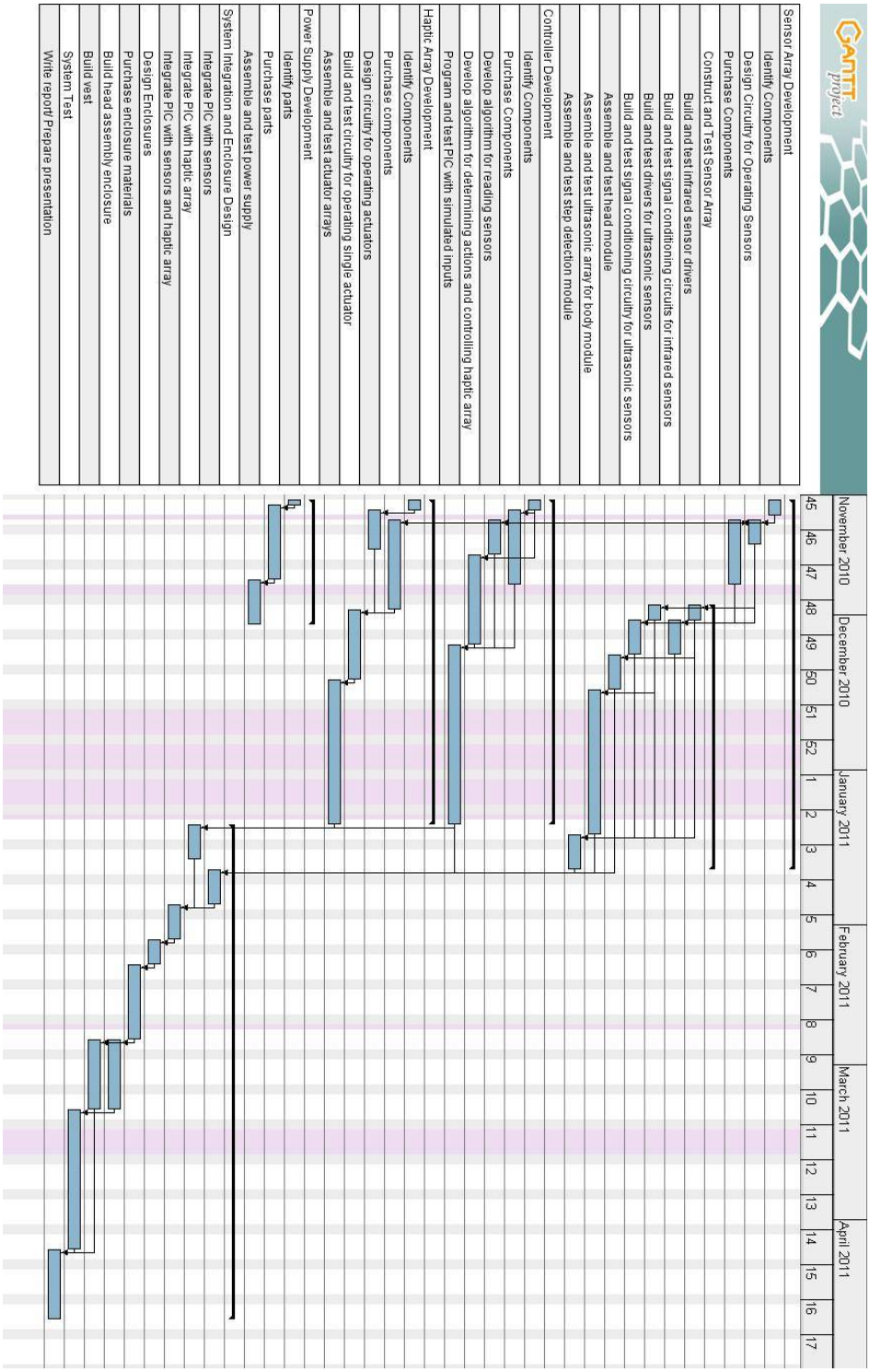

[1] **Since the purpose of this document is only to illustrate the expected depth and format for the proposal, this chart has not been updated to match the milestones, and it is using an older type of software (Gantt Project) that is no longer used with EE411.**

3.4 Cost Estimate

The expected costs for this project are outlined in the table below:

Item	Unit	Unit Price	Quant.	Sub-Total
Labor				
Students	Hour	$10	1000	$10000
Faculty	Hour	$50	64	$3200
Labor Total				**$13200**
Materials				
Ultrasonic Sensors	Ea	$30.00	10	$300
Infrared Sensors	Ea	$15.00	5	$75
PIC Microcontroller	Ea	$1.00	10	$10
Vibration Motors	Ea	$2.00	20	$40
Batteries	Ea	$12	5	$60
Battery Mount	Ea	$3.75	4	$15
Fabric/ sewing notions for vest	--	--	--	$10
Materials Total				**$510**
Project Cost Estimate				**$13710**

4. SOURCES USED

[1] American Foundation for the Blind, "Blindness Statistics," February 2006, http://www.afb.org (accessed September 9, 2010).

[2] The Seeing Eye Inc., "About Us," February 2006, http://www.seeingeye.org/AboutUs.asp (accessed September 9, 2010).

[3] Nurion-Raycal, "LaserCane," U. S. Patent #3198952, October 10, 1998.

[4] Ralph Plotkin, "Add Walking to Your Daily Routine," *Annapolis Capital Gazette*, August 14, 2010.

[5] F. Miyara, "Sound Levels," February 2004, http://www.eie.fceia.unr.edu.ar/~acustica/comite/soundlev.htm (accessed September 10, 2010).

[6] USA Today, "State High Temperature Records," August 2006, http://www.usatoday.com/weather/wheat7.htm (accessed September 10, 2010).

[7] USA Today, "State Low Temperature Records," August 2006, http://www.usatoday.com/weather/wcstates.htm (accessed September 10, 2010).

[8] Brebner, J. T. and A. T. Welford, "Introduction: an historical background sketch," in A. T. Welford (Ed.), *Reaction Times*, New York: Academic Press, pp. 1-23, 1980.

[9] ISO catalog, "11.180.30: Aids for blind or partially sighted people," http://www.iso.org/iso/home/store/catalogue_ics/catalogue_ics_browse.htm?ics1=11&ics2=180&ics3=30&published=on (accessed September 27, 2012).

[10] Migatron Corp., "Understanding Ultrasonics," http://migatron.com/understanding_ultrasonics.htm (accessed September 13, 2010).

[11] "LV-MaxSonar-EZ1 High Performance Sonar Range Finder," EE411 course website, http://www.usna.edu/EE/ee411 (accessed September 21, 2010).

[12] "Sharp GP2D120 Datasheet," Acroname Robotics, http://www.acroname.com/robotics/parts/R146-GP2D120.html (accessed September 21, 2010).

[13] C. H. King, A. T. Higa, M. O. Cuijat, S. H. Han, J. W. Bisley, G. P. Carment, E. Dutson, W. S. Grundfest, "A pneumatic haptic feedback actuator array for robotic surgery or simulation," *J. Health Technol.* **125**, pp. 217-222, 2007.

[14] T. Takayuki, Y. Hiroaki, I. Hiroo, "A wearable haptic interface using vibratory motor array," *International Journal of Robotics*, **42**, pp. 243-254, 2007.

[15] "PIC Microcontrollers," Microchip Technology, Inc., http://www.microchip.com (accessed October 26, 2010).

[16] "Miniature Vibrating Page Motors," Electronic Goldmine, http://www.goldmine-elec-products.com/products.asp?dept=1107 (accessed September 21, 2010).