Stepper Motors*

Charles B. Cameron

March 2, 2005

*Course notes for EE461 Microprocessor-based Digital Design

Contents

1 Theory **1**

2 Connecting the Stepper Motor **5**

3 Computer Control of the Stepper Motor **6**

List of Figures

1 Construction of a stepper motor with 8 stator poles and 6 rotor poles. 2
2 Phase A of a 12/6 stepper motor. 4
3 Phase AB of a 12/6 stepper motor. 4
4 Phase B of a 12/6 stepper motor. 5
5 Connections for a six-lead stepper motor. 6
6 Computer interface to a six-lead stepper motor. 7

1 Theory

A stepper motor is a specialized form of motor which produces motion in discrete steps. The control signals responsible for making it move in steps are digital signals, which makes this kind of motor well-suited to digital control applications. In particular, it is straightforward to program a microprocessor to issue appropriate digital control signals to move the motor in either direction at various speeds.

An important parameter of a stepper motor is the angle α associated with each full step. This is often printed on the bottom of the motor, or it may be found in a specification sheet, or you might have to conduct an experiment to measure it. (The angle may be expressed for each half step, since half-step control produces finer motion and so is often preferable.)

Another important parameter of a stepper motor is the number N of steps per revolution. There is a simple relationship between α and N:

$$N = \frac{360^\circ}{\alpha} = \frac{2\pi}{\alpha}.$$

To achieve any desired angle $\Delta\phi$ of rotation requires a number of full steps

$$n = \frac{\Delta\phi}{\alpha}.$$

In general this ratio has a fractional component.

As will be seen shortly, it is quite easy to generate half steps in lieu of full steps. In this case we need a number of half steps

$$n_{\text{half steps}} = \frac{2\Delta\phi}{\alpha}.$$

Although we may elect to operate the stepper motor in full or half steps, the numbers n and $n_{\text{half steps}}$ must both be integers.[1]

It is often necessary to control a motor to achieve a specified rate of rotation (angular velocity), rather than a specific angle of rotation. To achieve an angular rate of rotation ω, we require

$$\begin{aligned} \omega &= \frac{\Delta\phi}{\Delta t} \\ &= \frac{n\alpha}{\Delta t}. \end{aligned}$$

From this we can see that the required number of steps per unit time is

$$\frac{n}{\Delta t} = \frac{\omega}{\alpha}.$$

[1] Other fractions of a step are more difficult to achieve, requiring a technique known as micro-stepping. Since this technique requires the use of analog (that is, continuously variable) control voltages, it will not be considered further here.

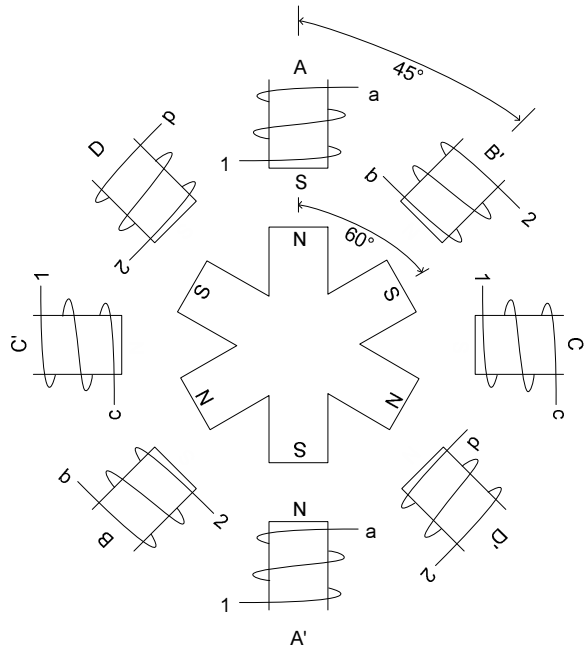

Figure 1: Construction of a stepper motor with 8 stator poles and 6 rotor poles.

A similar result holds if we use half-step control:

$$\frac{n_{\text{half steps}}}{\Delta t} = \frac{2\omega}{\alpha}.$$

For a microprocessor to operate the stepper motor, then, requires either that it issue a required number of steps (half-steps) to achieve a desired angle of rotation or a required number of steps (half-steps) per unit time to achieve a desired angular velocity. Microprocessors are well-suited to both of these forms of control. One simply requires the issuance of step (half-step) commands and counting them. The other requires issuing steps (half-steps) at regular intervals.

Any microprocessor can operate a stepper motor to achieve a desired angle of rotation. The PIC16F874 has three timers and this makes it easy for it to control the angular velocity of a stepper motor also.

Because steps (half-steps) correspond to discrete angles, it is not possible to achieve any desired angle of rotation whatever. Similarly, it is not possible to achieve any desired angular velocity whatever because it is not possible to issue stepping commands at any arbitrary time. For example, the PIC16F874 can only issue outputs at most once each instruction cycle. In general, some instruction cycles are used for other purposes than just operating a stepper motor, too, so there is also an upper limit on the rate of rotation.

Figure 1 shows the internal construction of a simplified stepper motor. The central rotor has $m_{\mathrm{R}} = 6$ poles and the outer stator has $m_{\mathrm{S}} = 8$ poles in this

case. The poles on the stator have inductive windings to permit them to be activated and deactivated. For example, stator poles A and A' are activated at the same time to create the field shown in the figure. The nearest rotor poles will align with the stator poles of opposite polarity, so that a south rotor pole seeks a north stator pole and vice versa.

The figure shows that only stator poles A and A' have any polarity. This is because the terminals marked 1 have a high voltage attached to them and the terminals marked a are grounded. Therefore, current flows in the coils that separate these terminals. By the right-hand rule, the magnetic polarities are as shown in the figure.

The terminals marked 2 also have a high voltage attached to them but the terminals marked b, c, and d are open-circuited. With no current flowing in the coils joining these terminals, no magnetic field is associated with them and they play no part in the motion of the rotor.

First we will consider full-step control in more detail. To move the rotor clockwise by the smallest single step, we need to de-energize stator poles A and A' (by disconnecting terminal a from ground) and activate stator poles B and B' (by grounding terminal b) so that B presents a north pole to the rotor and B' presents a south pole. This will cause the rotor to advance by $60° - 45° = 15°$ clockwise. It should be clear, therefore, that in this stepper motor there are $360°/15° = 24$ full steps per revolution.

We could instead make the stepper motor advance $15°$ in a counterclockwise direction by instead activating stator poles D and D' (by grounding terminal d) so that D presents a north pole to the rotor and D' presents a south pole.

We could continue moving the rotor one step at a time in either direction by selectively grounding successive terminals. The grounding sequence $a \to b \to c \to d \to a \to \ldots$ causes the rotor to advance one step at a time in the clockwise direction. The grounding sequence $a \to d \to c \to b \to a \to \ldots$ causes the rotor to advance one step at a time in the counterclockwise direction.

In order to grasp half-step control, let's consider an alternative design as shown in Figure 2. In this construction there are 12 stator poles and 6 rotor poles. Also, each stator pole now has two coils on it, permitting it to present either a north pole or a south pole to the rotor. With just the a terminal grounded and with terminals b, c, and d all left disconnected, the stator pole polarities are as shown in the figure. (Remember, a high voltage is applied continually at terminals 1 and 2.)

With this design it is easy to get a rotor pole to advance halfway between stator poles by simply activating adjacent stator poles simultaneously. By grounding terminal b as well as terminal a, we activate all the stator poles as shown in Figure 3. The north stator pole at the top of the figure is now held halfway between two adjacent south poles, which represents a half step advance clockwise. In this construction, a half step is $15°$. In the construction of Figure 1, this was the angle of a whole step.

If we now disconnect terminal a, leaving only terminal b grounded, we achieve the situation shown in Figure 4. Here the rotor has completed another half step clockwise.

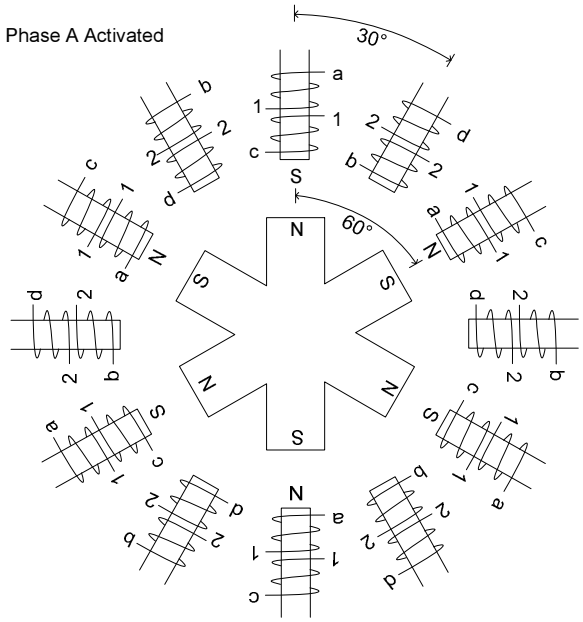

Figure 2: A stepper motor with 12 stator poles and 6 rotor poles. Here, only terminal a has been grounded.

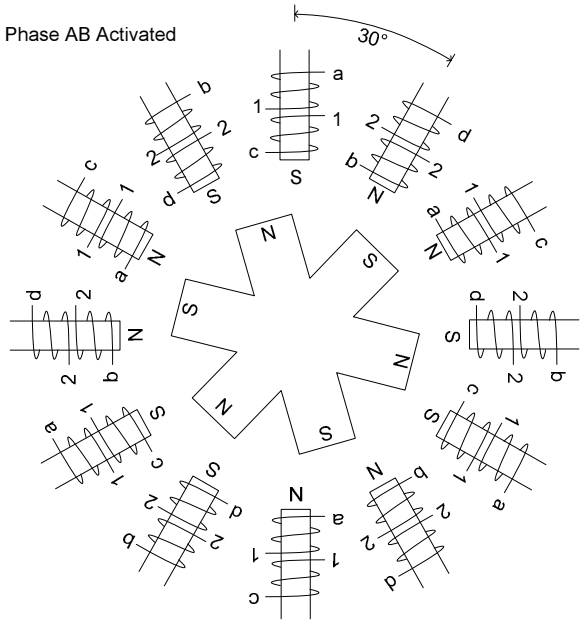

Figure 3: A stepper motor with 12 stator poles and 6 rotor poles. Here we have terminals a and b both grounded.

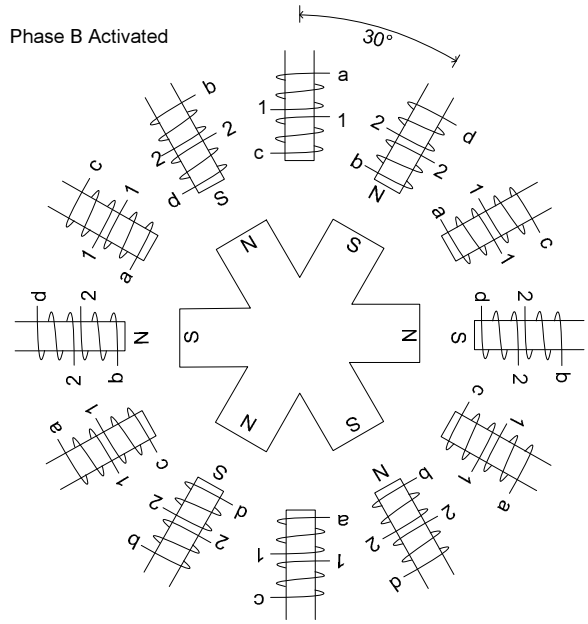

Figure 4: A stepper motor with 12 stator poles and 6 rotor poles. Here we have just terminal b grounded.

We could continue the half-step control using this pattern of grounding terminals:

$a \to ab \to b \to bc \to ccd \to d \to da \to a \to \ldots$	half steps in the clockwise direction
$a \to ad \to d \to cd \to cbc \to b \to ab \to a \to \ldots$	half steps in the counterclockwise direction

How could we achieve full step control with this construction? We could have skipped the intervening half step during which both terminals a and b were grounded. Then the rotor pole would not have stopped halfway between adjacent stator poles. This would require the following pattern of grounding terminals:

$a \to b \to c \to d \to a \to \ldots$	full steps in the clockwise direction
$a \to d \to c \to b \to a \to \ldots$	half steps in the counterclockwise direction

2 Connecting the Stepper Motor

From the outside observer's point of view the electrical connections for a typical six-lead stepper motor are like those in Figure 5. In this kind of stepper motor

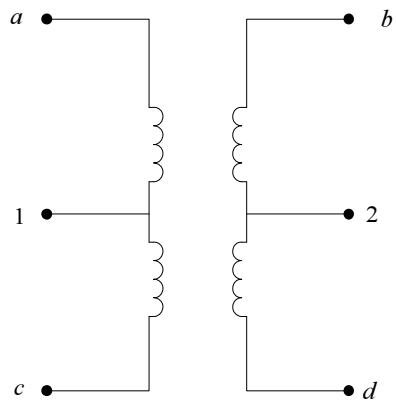

Figure 5: Connections for a six-lead stepper motor.

the leads are grouped into two sets of three.

Although the wires may be color-coded, the connections may not be apparent unless a data sheet can be found. However, there is a simple experimental method for establishing the connections. All four coils have roughly the same DC resistance R. You can use an ohmmeter to measure the resistance between various pairs of leads and so determine which is which. Pairs separated by an open connection are not in the same set. Pairs separated by resistance $2R$ must be in the same set and so are either the connected pair a and c or the connected pair b and d.[2] Pairs separated by resistance R must include one of the two central terminals, marked 1 and 2.

To wire the stepper up for operation, connect the leads labeled 1 and 2 to the (positive) power supply. The remaining four leads can be connected to a high voltage when they are to be inactive and a low voltage when they are to be activated.

If the size of a step is not marked on the motor, you can measure it by grounding the terminals in the sequence $a \to b \to c \to d \to a \to \ldots$, making the motor rotate one step at a time in one direction.[3] Count the number of steps necessary to achieve a complete revolution of the motor and divide this number into 360° to obtain the step-size α.

Half-step control lets you achieve higher torque and smoother operation.

3 Computer Control of the Stepper Motor

How can the four terminals be grounded under computer control? Figure 6 shows one way to achieve this. Activating one transistor can be accomplished

[2]How you label them is arbitrary, for there is no real distinction between them. However, the $a \to b \to c \to d \to a \to \ldots$ sequence could cause rotation either clockwise or counterclockwise, depending on how you assign the labels.

[3]The reverse sequence will rotate the motor in the other direction.

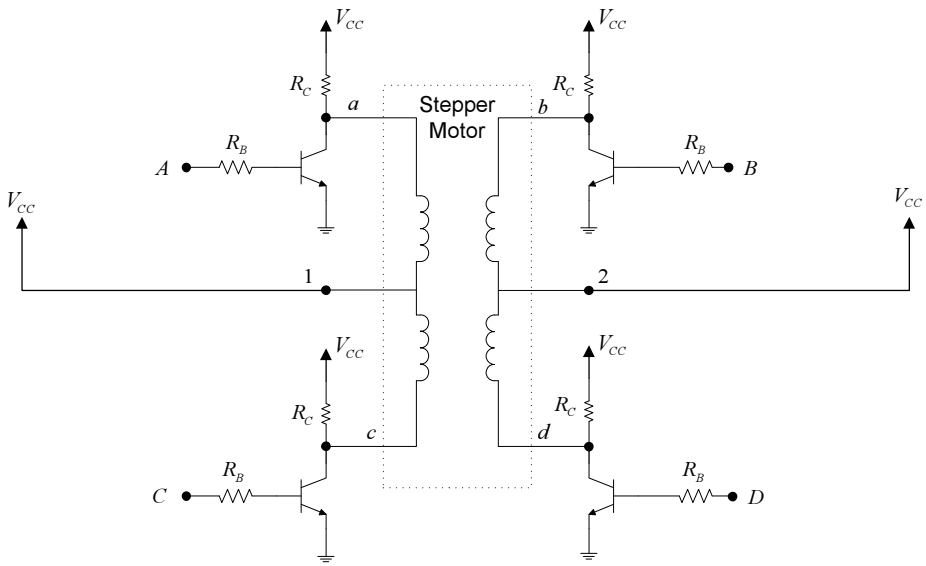

Figure 6: Computer interface to a six-lead stepper motor.

by applying a high voltage to one base lead, say A. This injects current into the transistor's base, inducing current to flow from V_{CC} through the collector of the transistor and into the emitter, terminal a, which is thereby grounded. It is not sufficient to simply connect the processor's output pins directly to the terminals of the stepper motor because the current necessary to operate the motor is almost invariably much greater than the maximum current the output pins can safely sink.

Resistor R_C is needed so that when the transistor is turned off, the current through the inductor has a path to follow. Omitting this creates the risk of arcing and sparking in the coils.

The current through the coils when the transistors are conducting is $I_{\mathrm{Coil}} \approx V_{\mathrm{CC}}/R$ where R is the resistance of the coil. When the transistors are shut off, this continuing but decaying current will induce a voltage across R_C. The collector voltage will, therefore, be $V_C = V_{\mathrm{CC}} + I_{\mathrm{Coil}} R_C$. You should pick R_C so that this voltage does not exceed the collector-emitter breakdown voltage for the transistor.

Resistor R_B needs to be chosen to control the amount of current into the transistor's base, because the base current controls the current flowing through the collector and emitter, and therefore through the stepper motor's coil. To get sufficient magnetic field strength to get the motor to work requires enough current. The value of this required current is specified in the data sheet, if available, but may need to be determined empirically. A prudent procedure is to start with a low voltage, say $V_{\mathrm{CC}} = 5\,\mathrm{V}$, and slowly increase it until the motor moves when you apply a suitable controlling signal pattern. Measure the

drawn current I_{Coil}.

The transistor has a parameter β that relates injected base current to collector current: $I_C = \beta I_B$. (This parameter is sometimes shown as h_{fe} in the data sheet.)

Once β and $I_C = I_{\text{Coil}}$ are known, you can calculate R_B by this formula:

$$R_B = \frac{(V_{\text{DD}} - V_\gamma)\,\beta}{I_C}$$

where V_{DD} is the voltage output by the microprocessor and applied to the base resistor R_B and V_γ is the base-emitter voltage, typically around 700 mV.