EE461
Signal Conditioning

Charles B. Cameron

March 25, 2005

Contents

1 Linear Transformation **2**

2 A Circuit to Perform a Linear Transformation **3**

3 Example **4**

4 Simulation of the Example **6**

5 Conclusion **6**

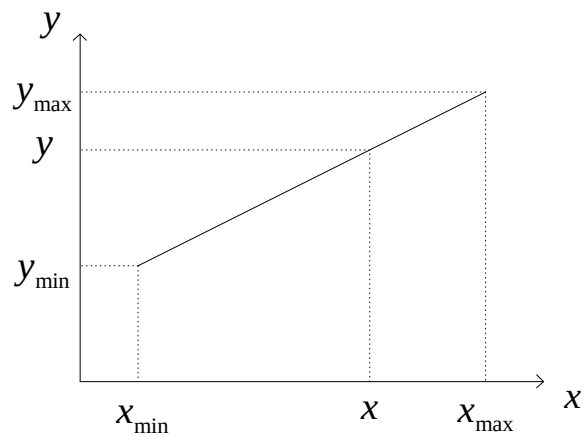

Figure 1: Linear Transformation

1 Linear Transformation

Consider the graph in Figure 1. It shows an input variable, x, and an output variable, y. The goal is to find a mathematical transformation to find the function $y(x)$ and then to find a circuit which can perform the transformation. This is one of the main aspects of signal conditioning.

We can accomplish this goal by considering two equivalent expressions for the slope m of the line which joins the two points (x_{min}, y_{min}) and (x_{max}, y_{max}). The first is based on the two endpoints. The second is based on one endpoint, say (x_{min}, y_{min}), and an arbitrary point (x, y) somewhere on the line.

$$m = \frac{y_{max} - y_{min}}{x_{max} - x_{min}} = \frac{y - y_{min}}{x - x_{min}}$$

Solving this equation for y gives

$$\begin{aligned} y &= y_{min} + \frac{x - x_{min}}{x_{max} - x_{min}} (y_{max} - y_{min}) \\ &= \frac{x_{max}y_{min} - x_{min}y_{min} - x_{min}y_{max} + x_{min}y_{min}}{x_{max} - x_{min}} + \frac{y_{max} - y_{min}}{x_{max} - x_{min}} x \\ y &= \frac{x_{max}y_{min} - x_{min}y_{max}}{x_{max} - x_{min}} + \frac{y_{max} - y_{min}}{x_{max} - x_{min}} x \end{aligned}$$

This equation is in one of the standard forms for an equation of a line,

$$y = mx + b \tag{1}$$

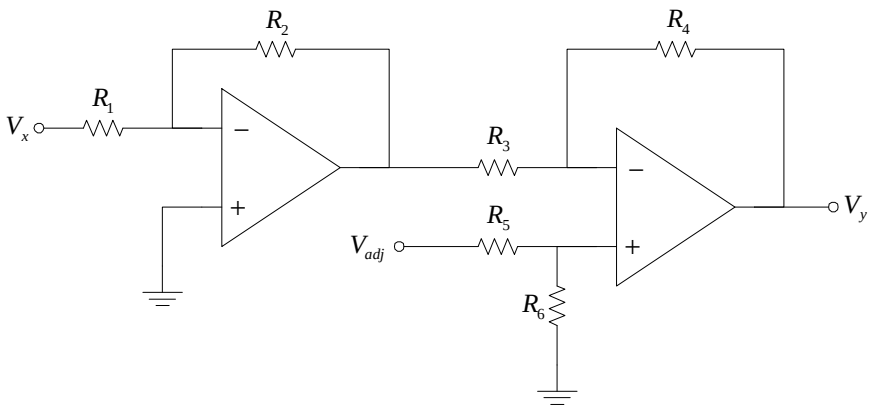

Figure 2: A Circuit to Perform a Linear Transformation

where

$$b = \frac{x_{max}y_{min} - x_{min}y_{max}}{x_{max} - x_{min}} \tag{2}$$

$$m = \frac{y_{max} - y_{min}}{x_{max} - x_{min}} \tag{3}$$

2 A Circuit to Perform a Linear Transformation

Now that we have the equation to transform the input variable x to the output variable y, we want to find a circuit which can do this operation in the electrical realm. Let us take voltage V_x as the input and voltage V_y as the output. Figure 2 has a suitable topology (configuration) which we analyze here.

The output of the leftmost opamp is

$$V_1 = -\frac{R_2}{R_1}V_x \tag{4}$$

The input at the + terminal of the rightmost opamp is

$$V^+_{right} = \frac{R_6}{R_5 + R_6}V_{\text{adj}} \tag{5}$$

Using superposition to analyze the output V_y of the rightmost opamp

and using (4) and (5), we have

$$
\begin{aligned}
V_y &= -\frac{R_4}{R_3}V_1 + \left(1 + \frac{R_4}{R_3}\right)V_{right}^{+} \\
&= -\frac{R_4}{R_3}\left(-\frac{R_2}{R_1}V_x\right) + \left(1 + \frac{R_4}{R_3}\right)\left(\frac{R_6}{R_5 + R_6}V_{\text{adj}}\right) \\
V_y &= \frac{R_2 R_4}{R_1 R_3}V_x + \frac{R_6(R_3 + R_4)}{R_3(R_5 + R_6)}V_{\text{adj}} \qquad (6)
\end{aligned}
$$

By comparing (6) with (1), (2), and (3), we see that

$$
m = \frac{y_{max} - y_{min}}{x_{max} - x_{min}} = \frac{R_2 R_4}{R_1 R_3} \qquad (7)
$$

$$
b = \frac{x_{max}y_{min} - x_{min}y_{max}}{x_{max} - x_{min}} = \frac{R_6(R_3 + R_4)}{R_3(R_5 + R_6)}V_{\text{adj}} \qquad (8)
$$

Note that since stock resistors all have positive values of resistance, m can only be positive with this circuit, not negative, and b can be negative only if V_{adj} is negative.

3 Example

Suppose

$$
\begin{aligned}
x_{min} &= -15\ \text{mV} \\
x_{max} &= +15\ \text{mV} \\
y_{min} &= 0\ \text{V} \\
y_{max} &= 5\ \text{V}
\end{aligned}
$$

Applying (7) and (8) we find that

$$
\begin{aligned}
m &= 166.7 \\
b &= 2.5\ \text{V}.
\end{aligned}
$$

To find suitable resistor values, we can make some simplifying choices. For example, let's choose $2R_3 = R_4 = 1\ \text{k}\Omega$, resulting in $R_3 = 500\ \Omega$. Then m reduces to

$$
\begin{aligned}
m &= \frac{2R_2}{R_1} \\
\frac{R_2}{R_1} &= \frac{166.7}{2} = 83.3.
\end{aligned}
$$

We can choose $R_2 = 100\ \text{k}\Omega$ and $R_1 = 1.2\ \text{k}\Omega$, both of which are available as 5%-accuracy resistors.[1]

[1] There are several resistor ratio calculators on the Internet. One is at `http://www.employees.org/~bennet/teledesign/ResistorRatio.html`.

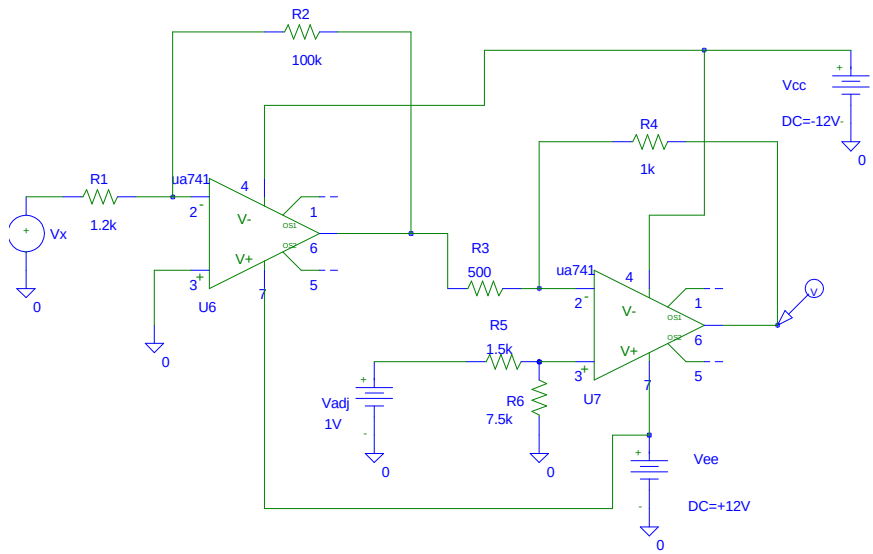

Figure 3: Example Signal Conditioning Circuit in PSpice

With these choices, b reduces to

$$b = \frac{3R_3R_6}{R_3(R_5+R_6)}V_{\text{adj}} = \frac{3R_3R_6}{R_3(R_5+R_6)}1\text{ V} = 2.5\text{ V}$$

if we select

$$V_{\text{adj}} = 1\text{ V}.$$

A little algebra shows that $R_6 = 5R_5$. If we choose $R_5 = 1.5\,\text{k}\Omega$ and $R_6 = 7.5\,\text{k}\Omega$, both of which also are available as 5%-accuracy resistors, and calculate the values of m and b which result, we discover that we get exactly the desired values, with zero error. Of course, since the resistors are only accurate to 5%, we should not expect zero error in practice.

It often happens that some of the simplifying choices we pick early on lead to unacceptable requirements. For example, had we picked $R_3 = 2R_4$ above, we would have found it necessary to use some resistors with negative resistors. While it is possible to implement such resistors using amplifiers, it is considerably more convenient simply to alter the initial simplifying choice until this unpleasant result not occur. We could also have altered V_{adj} to eliminate the need for negative resistors.

Another result which sometimes happens is that the choices lead to requirements which are merely inconvenient. For example, a requirement to use a $15\,\text{p}\Omega$ resistor is impractical. In any situation with more unknowns that equations, there is an infinite number of mathematically feasible solutions but not all of them make sense physically.

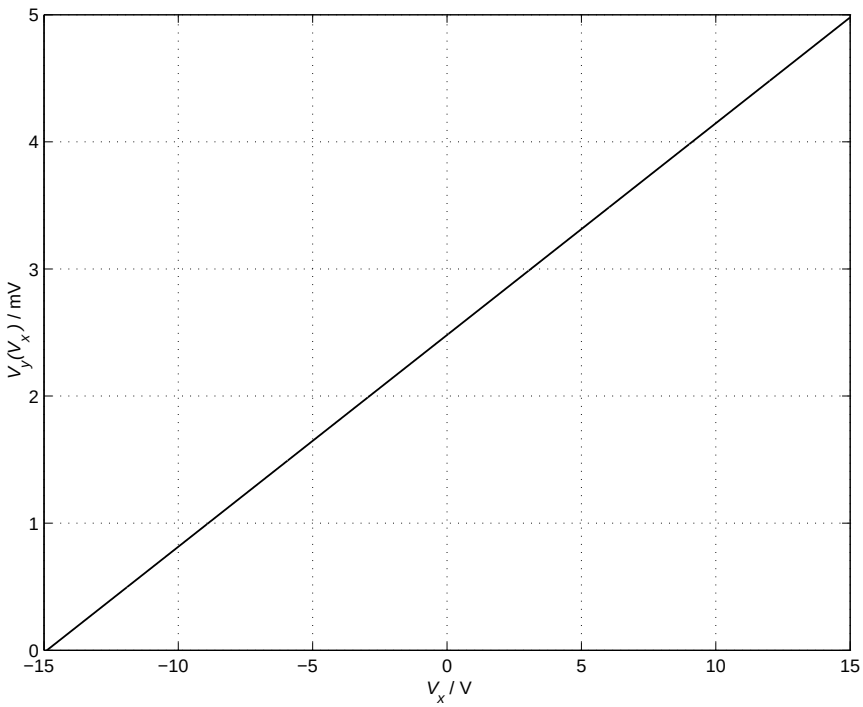

Figure 4: Simulation of the Signal Conditioning Example

4 Simulation of the Example

Figure 3 shows the schematic diagram for this particular example as shown in PSpice. We have used uA741 opamps in this circuit. Figure 4 is a plot of the results of the simulation. The results were transferred from Probe in PSpice to Matlab for graphing. It is clear from this graph that the desired transformation has been achieved. An input $V_x = -15\,\mathrm{V}$ maps to output $V_y = 0\,\mathrm{V}$ and input $V_x = +15\,\mathrm{V}$ maps to output $V_y = 5\,\mathrm{V}$, as specified, with intermediate values falling right on the line.

5 Conclusion

In conclusion, we now have two design equations for a particular circuit which allow us to find suitable values of resistors R_1 through R_6, as well as V_{adj}, in order to realize a linear transformation from voltages within the range $V_{x,\mathrm{min}}$ to $V_{x,\mathrm{max}}$ to voltages within a new range from $V_{y,\mathrm{min}}$ to $V_{y,\mathrm{min}}$. This is the essential step in conditioning signals which lie in one range to render them suitable as inputs to a device with a different range of input voltages.