EE461
Microcomputer-Based Digital Design

Example Laboratory Exercise

Review of Digital Logic and the Altera PLD

Objectives

Renew you familiarity with the digital electronics lab and the operation of the equipment.
Review basic breadboard techniques.
Design a gray-code sequencer.

Equipment

Digi-Designer
Altera University Board
Logic Probe
Digital Multimeter (DMM)
Oscilloscope

Components

As required.

Debugging

- Use the logic probe to check that each flip-flop and LED is operational
- Use the DMM to check the source voltage on the Digi-Designer.
- Use the oscilloscope to show your sequencer works correctly.

Counter Design Procedure

- Design and construct a three-bit, four-step gray-code sequencer that cycles repeatedly through the sequence you have specified, changing codes once every clock cycle. For example, 010, 011, 001, 000 is a three-bit, four-step gray-code sequence. Start your sequence with any code other than 000. (Recall that in a gray code, successive codes differ by only a single bit.)
- Include an asynchronous reset function in your design that will put the sequencer into the initial state instantly.
- Build the device with the Max Plus II software and the Altera University Board.
- In your lab report
  - show *all design work* including the state diagram.
  - Clearly present and interpret the data which convinced you that your circuit was correct.

Selected code:

A B	C = 0	C = 1
0 0		
0 1	d	a
1 1	c	b
1 0		

a b c d

0 1, 1 1 1, 1 1 0, 0 1 0

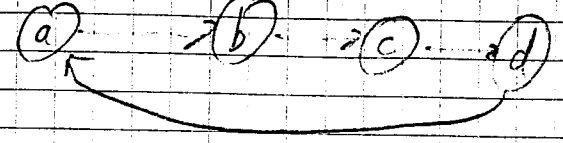

	Old State A	B	C	New State A	B	C
	0	0	0	x	x	x
	0	0	1	x	x	x
d	0	1	0	0	1	1
a	0	1	1	1	1	1
	1	0	0	x	x	x
	1	0	1	x	x	x
c	1	1	0	0	1	0
b	1	1	1	1	1	0

D_A

A B	C = 0	C = 1
0 0	x	x
0 1	0	1
1 1	0	1
1 0	x	x

$D_A = C$

D_B

A B	C = 0	C = 1
0 0	x	x
0 1	1	1
1 1	1	1
1 0	x	x

$D_B = 1$

D_C

A B	C = 0	C = 1
0 0	x	x
0 1	1	1
1 1	0	0
1 0	x	x

$D_C = \bar{A}$

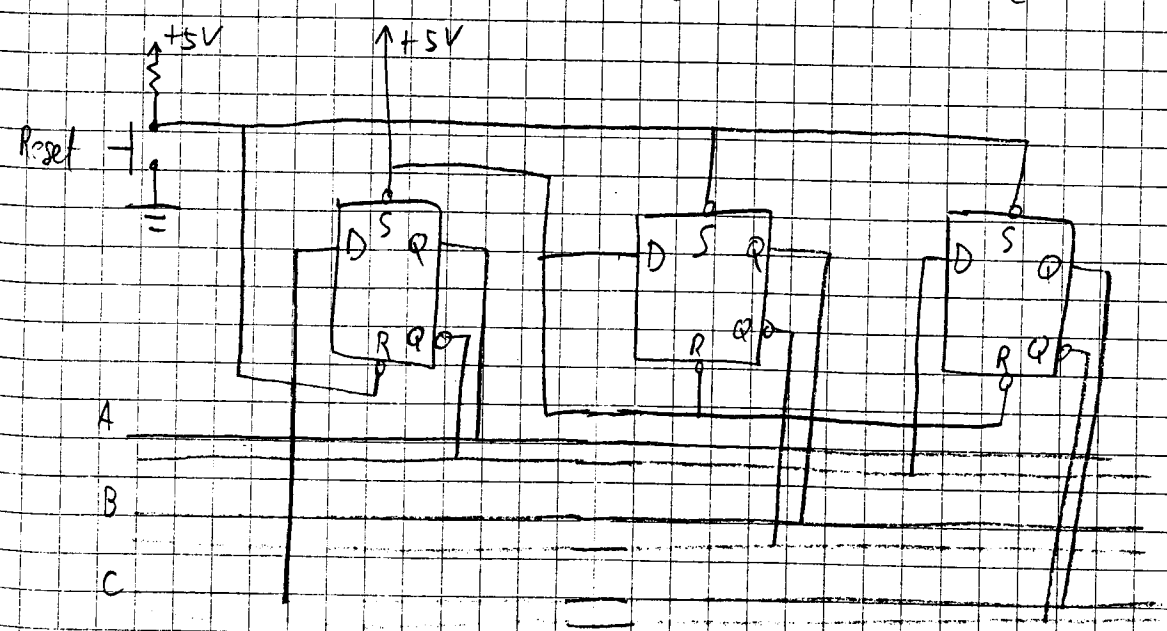

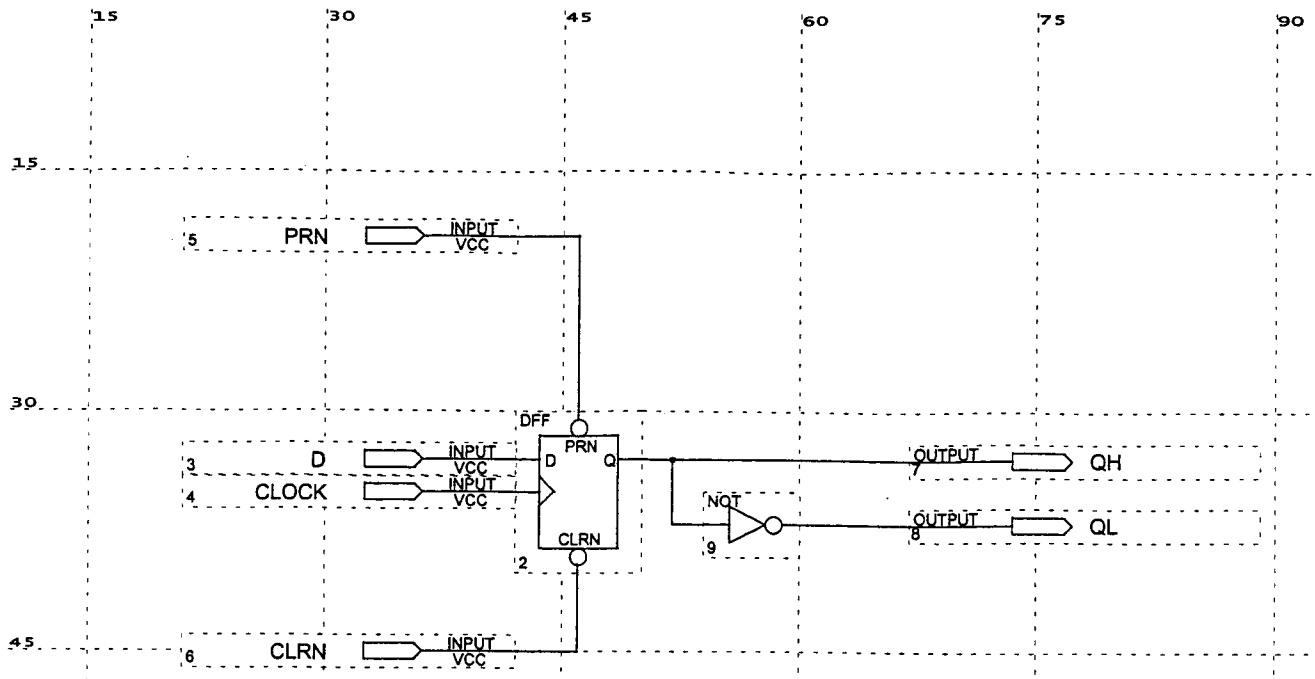

This is a D flip flop I created in our earlier design. I created a default symbol for it:

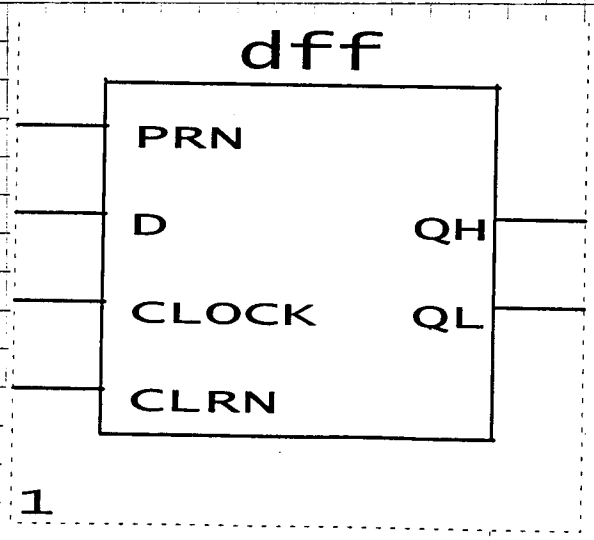

Here is the debugged schematic from MAX-Plus II.

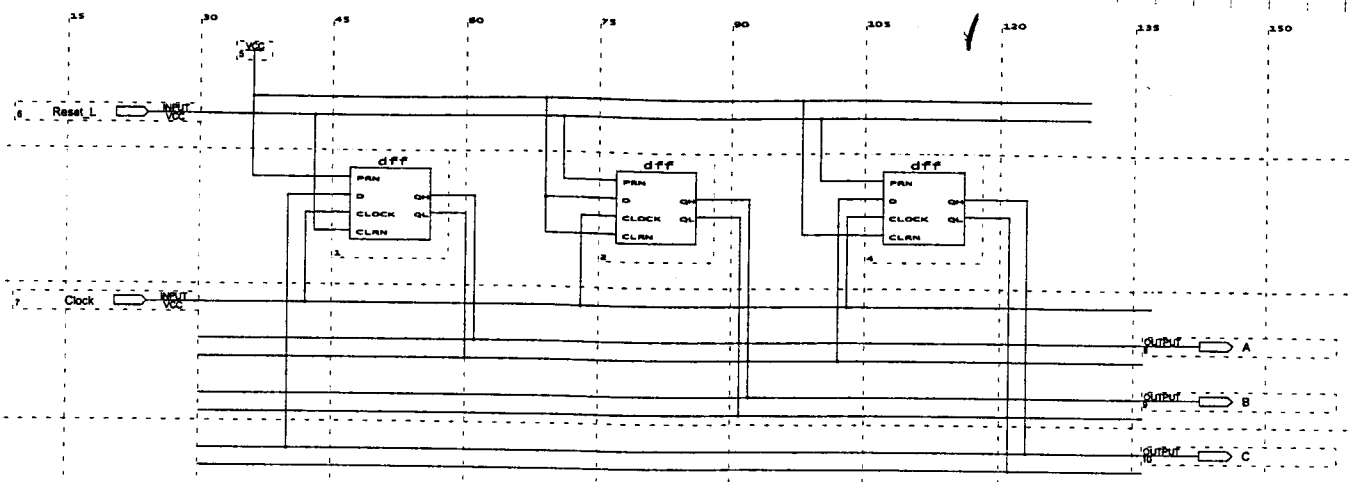

Here is a timing waveform, simulating the results

MAX+plus II 10.0 File: H:\EE461\LAB\EXAMPLEGRAYCODECOUNTER\EXAMPLE.SCF Date: 12/31/2001 12:17:11

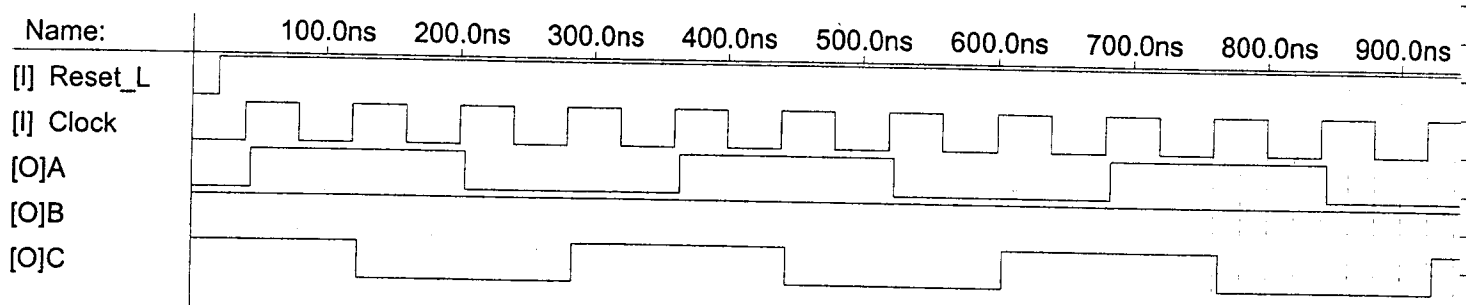

After the reset pulse, the state is ABC = 011. The sequence thereafter is 111, 110, 010, 011 and it repeats, as required.

In the lab, I connected PB_1 on the A via Universal Board (AUB) to an HP 34401A Digital Multimeter. The push button gives 0V when pushed, 5V otherwise.

Pin-out of the Altera - design:

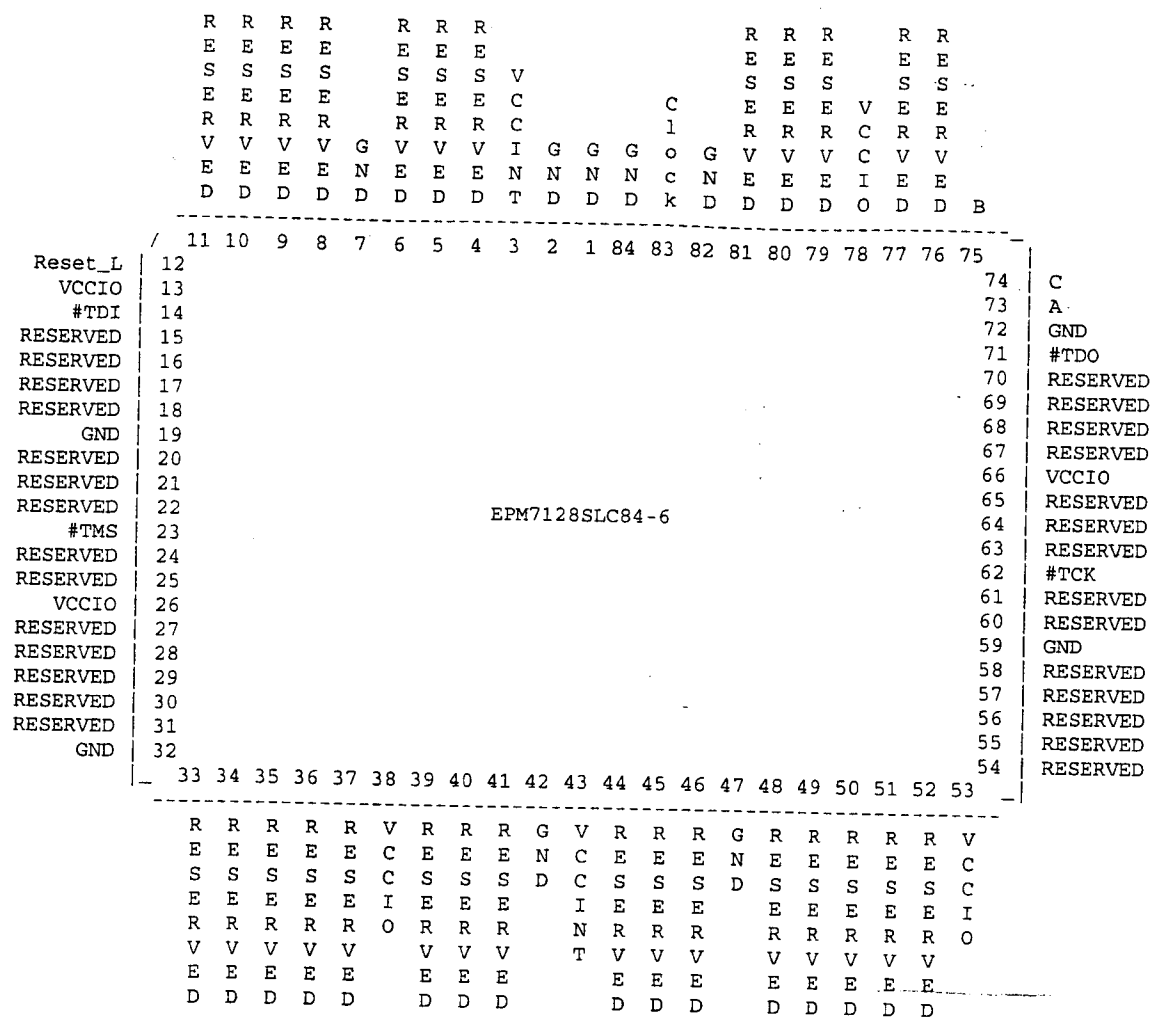

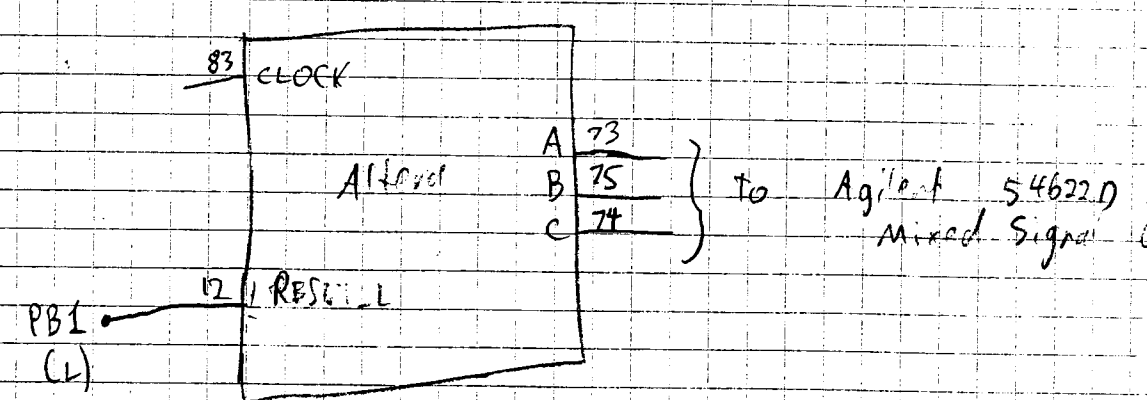

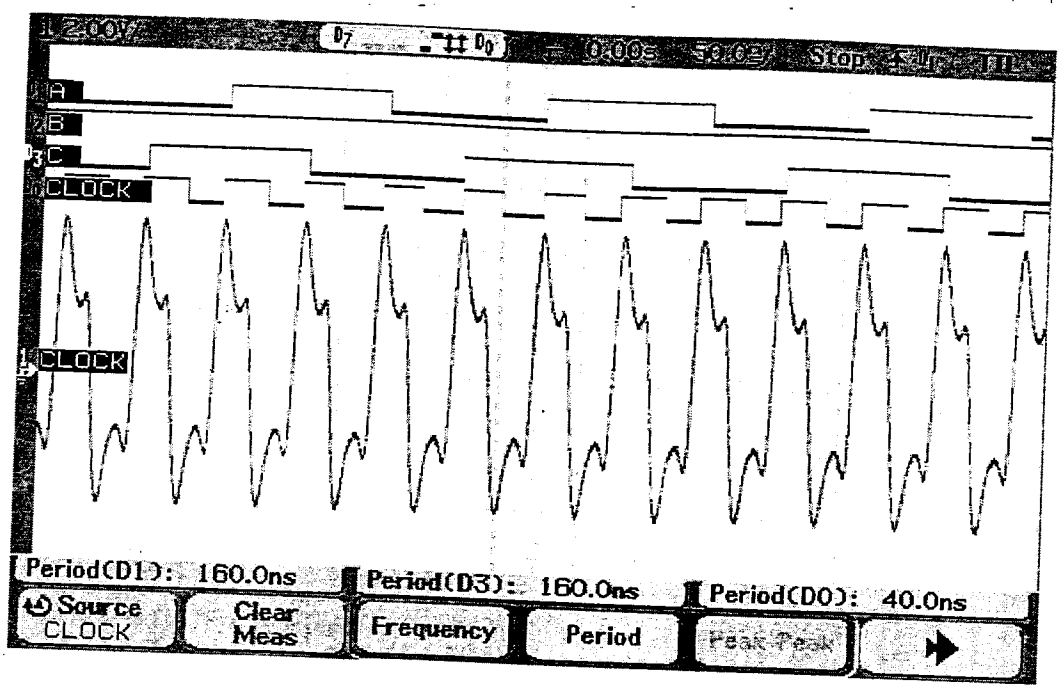

Note the clock has a period of $T_c = 40.0$ ns, corresponding to $f_{clock} = \frac{1}{T_c} = \frac{1}{40.0\,ns} = 25.0$ MHz

The sequence of ABC matches the diagram.
A and C each have a period of 160.0 ns, meaning it takes 4 clock cycles for each to repeat.

B is constant. A flip-flop could be eliminated by connecting B to Vcc.